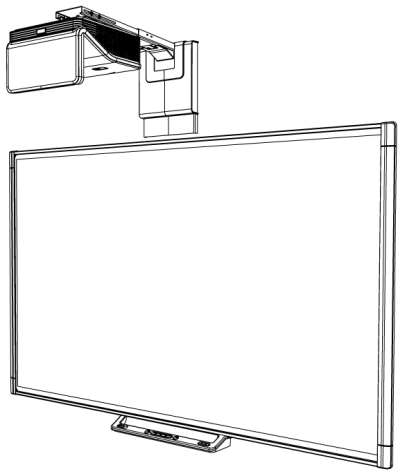

SMART Board® M600i6

Interactive whiteboard systems

Configuration and user's guide

For models M680i6 and M685i6

SMART®

FCC warning

This equipment has been tested and found to comply with the limits for a Class A digital device, pursuant to Part 15 of the US Federal Communications Commission Rules. These limits are designed to provide reasonable protection against harmful interference when the equipment is operated in a commercial environment. This equipment generates, uses and can radiate radio frequency energy and, if not installed and used in accordance with the manufacturer's instructions, may cause harmful interference to radio communications. Operation of this equipment in a residential area is likely to cause harmful interference in which case the user will be required to correct the interference at his own expense.

Trade-mark notice

SMART Board, SMART Notebook, SMART Meeting Pro, DViT, smarttech, the SMART logo and all SMART taglines are trade-marks or registered trade-marks of SMART Technologies ULC in the US and/or other countries. Microsoft, Windows and Internet Explorer are either registered trade-marks or trade-marks of Microsoft Corporation in the US and/or other countries. All other third-party product and company names may be trade-marks of their respective owners.

Copyright notice

© 2013SMART Technologies ULC. All rights reserved. No part of this publication may be reproduced, transmitted, transcribed, stored in a retrieval system or translated into any language in any form by any means without the prior written consent of SMART Technologies ULC. Information in this manual is subject to change without notice and does not represent a commitment on the part of SMART.

This product and/or use thereof covered by one or more of the following US patents: smarttech.com/patents.

10/2013

Important information

Before you install and use your SMART Board® M600i6 interactive whiteboard system, read and understand the safety warnings and precautions in this user's guide and the important information document included. These safety warnings and precautions describe the safe and correct operation of your interactive whiteboard system and its accessories, helping you to prevent injuries and equipment damage. Ensure that your interactive whiteboard system is always being used correctly.

In this document, "interactive whiteboard system" refers to the following:

- SMART Board M600 series interactive whiteboard
- SMART UF70 or SMART UF70w projector
- Accessories and optional equipment

The projector included with your system is designed to work only with certain SMART Board interactive whiteboard models. Contact your authorised SMART reseller (smarttech.com/where) for more information.

Safety warnings, cautions and important information

Installation

WARNING

- Failure to follow the installation instructions included with your SMART product could result in personal injury and damage to the product.
- To reduce the risk of fire or electric shock, do not expose the SMART product to rain or moisture.
- Two people are required to mount your SMART product because it may be too heavy for one person to safely manoeuvre.

  When you lift your interactive whiteboard, you and your assistant should stand on either side of the screen, supporting its weight at the bottom whilst balancing the top with your other hands.

- When mounting the projector boom on a framed or hollow wall, attach the mounting bracket to a stud to safely support the projector's weight. If you use only drywall anchors, the drywall can fail, resulting in possible personal injury, and damage to the product which may not be covered by your warranty.
- Do not leave cables on the floor where they can be a tripping hazard. If you must run a cable over the floor, lay it in a flat, straight line and secure it to the floor with tape or a cable management strip of a contrasting colour. Handle cables carefully and avoid excessive bending.

CAUTION

- Do not operate this unit immediately after moving it from a cold location to a warm location. When the unit is exposed to such a change in temperature, moisture can condense on the lens and crucial internal parts. Allow the system to stabilise to room temperature before operation to prevent possible damage to the unit.
- Do not place the unit in hot locations, such as near heating equipment. Doing so could cause a malfunction and shorten the life of the projector.
- Avoid setting up and using the SMART product in an area with excessive levels of dust, humidity and smoke.
- Do not place your SMART product in direct sunlight or near any appliance that generates a strong magnetic field.
- You must connect the USB cable that came with your SMART Board interactive whiteboard to a computer that has a USB compliant interface and that bears the USB logo. In addition, the USB source computer must be compliant with CSA/UL/EN 60950 and bear the CE mark and CSA and/or UL Mark(s) for CSA/UL 60950. This is for operating safety and to avoid damage to the SMART Board interactive whiteboard.

IMPORTANT

- Make sure an electrical socket is near your SMART product and remains easily accessible during use.
- Using your SMART product near a TV or radio could cause interference to the images or sound. If this happens, move the TV or radio away from the projector.

Operation

WARNING

- If you are using an external audio system, use only the power supply included with that product. Using the wrong power supply might create a safety hazard or damage the equipment. If in doubt, refer to the specification sheet for your product to verify the power

supply type.

- Do not climb (or allow children to climb) on a wall- or stand-mounted SMART Board interactive whiteboard.

  Do not climb on, hang from or suspend objects from the projector boom.

  Climbing on the interactive whiteboard or projector boom could result in personal injury or product damage.

CAUTION

- Do not block the projector's ventilation slots and openings.

IMPORTANT

- Keep your remote control in a safe place because there is no other way to access menu options.
- Disconnect the product from its power source when it's not used for a long period.

Other precautions

If you own a SMART product other than a SMART Board M680i6 and M685i6 series interactive whiteboard system, refer to the installation manual for your product for relevant warnings and maintenance instructions.

Environmental requirements

Before you install your SMART Board M600 interactive whiteboard system, review the following environmental requirements.

Environmental requirement	Parameter
Operating temperature	• 5°C to 35°C (41°F to 95°F) from 0m to 1800m (0' to 6000') • 5°C to 30°C (41°F to 86°F) from 1800m to 3000m (6000' to 9800')
Storage temperature	• -20°C to 50°C (-4°F to 122°F)
Humidity	• 5% to 95% storage relative humidity, non-condensing 5% to 85% operating relative humidity, non-condensing
Water and fluid resistance	• Intended for indoor use only. Doesn't meet any salt-spray or water ingress requirements. • Don't pour or spray liquids directly onto your interactive whiteboard, the projector or any of its sub-components.

Environmental requirement	Parameter
Dust	• Intended for use in office and classroom environments. Not for industrial use where heavy dust and pollutants can cause malfunctions or impaired operation. Periodic cleaning is required in areas with heavier dust. See *Cleaning the projector* on page 22 for information on cleaning the projector.
Electrostatic discharge (ESD)	• EN61000-4-2 severity level 4 for direct and indirect ESD • No malfunction or damage up to 8kV (both polarities) with a 330 ohm, 150 pF probe (air discharge) • Unmated connectors meet no malfunction or damage up to 4kV (both polarities) for direct (contact) discharge
Cables	• All SMART Board M600i6 interactive whiteboard system cables should be shielded to prevent potential accidents and degraded video and audio quality.
Conducted and radiated emissions	• EN55022/CISPR 22, Class A

Contents

Important information ..... **i**
Safety warnings, cautions and important information i
Environmental requirements iii

Chapter 1: About your interactive whiteboard system **1**
SMART Board M600i6 interactive whiteboard system features 2
Included accessories 4

Chapter 2: Installing your interactive whiteboard system **5**
Choosing a location 5
Choosing a height 6
Securing the projector to the boom 6
Routeing the cables 6
Installing SMART software 7

Chapter 3: Using your interactive whiteboard system **9**
Using your projector 9
Using your interactive whiteboard 20

Chapter 4: Maintaining your interactive whiteboard system **21**
Maintaining your interactive whiteboard 21
Cleaning the projector 22
Focusing and adjusting the projector image 23
Replacing the projector lamp 23

Chapter 5: Troubleshooting your interactive whiteboard system **29**
Before you start 30
Determining your interactive whiteboard system's status 31
Resolving interactive whiteboard issues 32
Resolving projector issues 33
Accessing the service menu 39
Transporting your interactive whiteboard system 40

Appendix A: Remotely managing your system through a network interface **41**
Webpage management 41
Simple Network Management Protocol (SNMP) 48

Appendix B: Remotely managing your system through an RS-232 serial interface **49**
Serial interface settings 50
Projector programming commands 51

Appendix C: Integrating other devices **73**
Video format 73
Connecting peripheral sources and outputs 77

Appendix D: Remote control code definitions **79**

Appendix E: Hardware environmental compliance **81**

Waste Electrical and Electronic Equipment and Battery regulations (WEEE and Battery Directives) 81

Batteries 81

Mercury 81

More information 81

Index **83**

Chapter 1

About your interactive whiteboard system

SMART Board M600i6 interactive whiteboard system features 2
SMART Board M600 series interactive whiteboard 2
SMART UF70 or SMART UF70w projector 3
Included accessories 4
Remote control 4
Pens 4
Optional accessories 4

Your SMART Board M600i6 interactive whiteboard system combines the following components:

- SMART Board M600 series interactive whiteboard
- Wall-mounted, short-throw SMART UF70 or SMART UF70w projector
- Accessories and optional equipment

This chapter describes the features of your interactive whiteboard and provides information about product parts and accessories.

SMART Board M600i6 interactive whiteboard system features

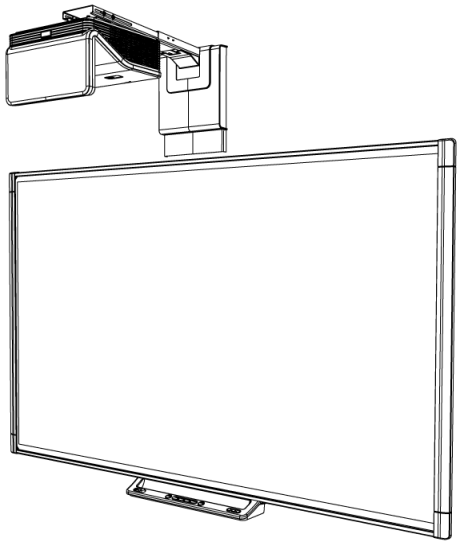

Your SMART Board M600i6 interactive whiteboard system uses the short-throw, high-offset SMART UF70 or SMART UF70w projector. The throw distance of the SMART UF70 and SMART UF70w projectors is half that of the SMART UF65 projector, resulting in a shorter boom and reduced shadows on the projected image.

When the projector displays an image from your computer on the touch-sensitive interactive whiteboard, you can do everything that you can do at your computer—open and close applications, scroll through files, conference with others, create new documents or edit existing ones, visit websites, play video clips and more—by touching the screen. You can use an array of gestures within applications.

This projector also supports video and audio connections from a variety of devices, including DVD/Blu-ray™ players, VCRs, document cameras and digital cameras, and can project media from these sources onto the interactive screen.

When you use SMART software with your SMART Board M600i6 interactive whiteboard system, you can write or draw over the projected computer image in digital ink using a pen tray pen or your finger, and then save these notes to a .notebook file or directly into any Ink Aware application.

SMART Board M600 series interactive whiteboard

Your SMART Board M600 series interactive whiteboard, featuring SMART's proprietary DViT® (Digital Vision Touch) technology, is the most intuitive touch-sensitive front projection interactive whiteboard in the world.

The SMART Board M600 series interactive whiteboard performs best with the SMART UF70 projector because of its exceptional colour performance, aspect ratio, input response and short-throw image distance.

Other features of your interactive whiteboard include the following:

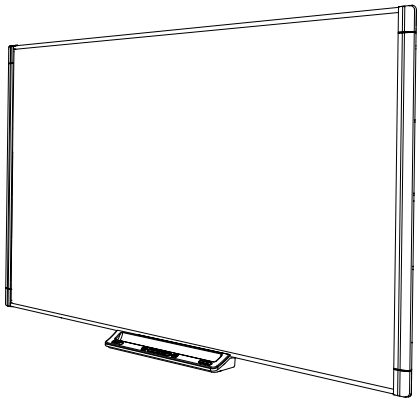

- Pen tray buttons that activate the pens' colours and the on-screen keyboard, as well as right-click and Orientation functions
- A durable hard-coated surface that is optimised for projection and is easily cleaned

For more information about your SMART Board interactive whiteboard, see the SMART Board *M600 series* interactive whiteboard *user's guide* (smarttech.com/kb/170410).

SMART UF70 or SMART UF70w projector

The SMART UF70 or SMART UF70w projector system includes a short-throw projector for use with SMART Board interactive whiteboards and a sturdy support system suitable for many different environments.

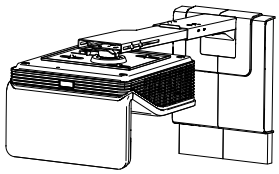

Other features of your projector system include the following:

- A wall-mounted, high-offset projector engine that uses DLP® technology by Texas Instruments™, providing BrilliantColor™ performance and Gamma 2.2 correction with SMART Presentation, Bright Room, Dark Room, sRGB and User modes
- PAL, PAL-N, PAL-M, SECAM, NTSC and NTSC 4.43 video system compatibility
- HDMI, Composite,and VESA® RGB video inputs (not included)
- WXGA, QVGA, VGA, SVGA, XGA, SXGA, SXGA+ and UXGA video format compatibility
- Native 1024 × 768 resolution (SMART UF70 projector)

  OR

  Native 1280 × 720 resolution (SMART UF70w projector in 16:9 aspect ratio mode)
- Remote management via a serial RS-232 interface, webpage or SNMP
- An alert broadcast feature that enables administrators to send notification messages to network-connected projector systems for immediate on-screen display
- Protected cable routing through a cable cover that limits tampering and clutter
- A secure mounting and installation system that includes the following:
  - An optional projector padlock ring to prevent removal of the projector from the boom
  - Accessory mounting hardware for solid masonry or framed wall installations kit (Part Number 1007416)
  - Templates and instructions for positioning the system safely

Included accessories

The following accessories are included with your interactive whiteboard system.

Remote control

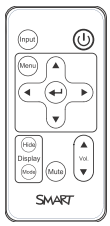

The remote control enables you to control the system and set up your projector. Use the remote control to access menu options, system information and input selection options.

Pens

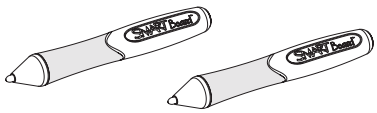

There are two pens included with your interactive whiteboard. Pick up a pen and press one of the four colour buttons on the pen tray (black, red, green or blue) to select the colour of digital ink that you write on the interactive whiteboard.

Optional accessories

You can add a variety of accessories to your interactive whiteboard to best meet your specific needs. Purchase these items from your authorised SMART reseller.

For more information on accessories, go to smarttech.com/accessories.

Chapter 2

Installing your interactive whiteboard system

Choosing a location 5
Choosing a height 6
Securing the projector to the boom 6
Routeing the cables 6
Installing SMART software 7

IMPORTANT

Use the SMART Board *M600i6* interactive whiteboard system *installation guide* (smarttech.com/kb/170555) to install your interactive whiteboard and projector.

This chapter provides additional considerations and details for installing your interactive whiteboard system.

Choosing a location

Choose a location for your interactive whiteboard system that's far from bright light sources, such as windows and strong overhead lighting. Bright light sources can cause distracting shadows on your interactive whiteboard and can reduce the contrast of the projected image.

Select a wall with a flat, regular surface and sufficient clearance to accommodate your interactive whiteboard system. Install the projector and your interactive whiteboard on the same flat surface. For best presentation alignment, mount your interactive whiteboard system in a location that's central to your audience's viewing direction.

For mobile or adjustable installation options, contact your authorised SMART reseller.

WARNING

Refer to your interactive whiteboard system's specifications (available at smarttech.com/support) for its weight. Check your local building regulations to ensure that your wall can support this weight and use appropriate mounting hardware for your wall type.

Choosing a height

SMART includes a mounting template with each interactive whiteboard system. If you lose this template, contact your authorised SMART reseller. Using this template ensures that you can do the following:

- Mount the projector at a safe height for head space clearance, whilst maintaining enough space for airflow and installation access above the unit.
- Position the projector at the correct height above your interactive whiteboard to align the projected image with the touch screen.

Dimensions on the template recommend a distance from the floor suitable for adults of average height. You should consider the general height of your user community when you choose a location for your interactive whiteboard.

Securing the projector to the boom

To learn how to secure the SMART UF70 or SMART UF70w projector to the boom, see the *SMART Board M600i6 interactive whiteboard system installation guide* included (smarttech.com/kb/170555).

Routeing the cables

If your interactive whiteboard uses one mounting bracket, make sure that all projector cables pass along the top of the bracket and then down the side of the interactive whiteboard.

If your interactive whiteboard uses two mounting brackets, make sure that all projector cables pass between the brackets. Space your wall-mounting brackets 10.2cm (4") apart to provide full support for the weight of your interactive whiteboard.

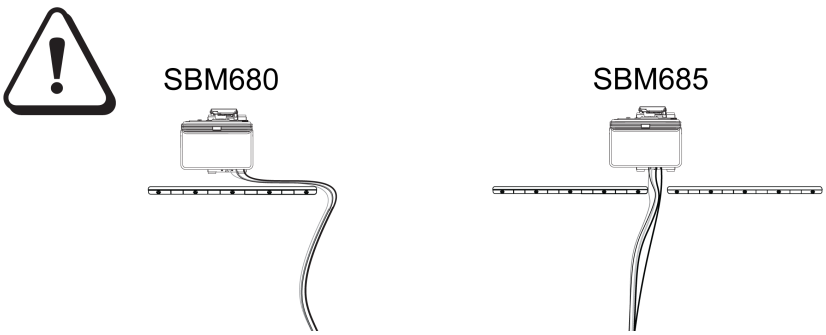

IMPORTANT

Do not connect the power cable to a power socket until you have connected all the cables to the projector and interactive whiteboard.

Installing SMART software

You must install SMART software, such as SMART Meeting Pro™ software or SMART Notebook™ collaborative learning software on the computer connected to your interactive whiteboard system to access all of its features.

Download SMART software from smarttech.com/software. These webpages list the minimum hardware requirements for each software version. If SMART software is already installed on your computer, take this opportunity to upgrade your software to ensure compatibility.

Chapter 3

Using your interactive whiteboard system

Using your projector 9
Using your remote control 9
Replacing the remote control battery 10
Using the remote control buttons 11
Adjusting projector settings 12
Focusing the image 18
Adjusting the image 18
Projector connection diagram 19
Using your interactive whiteboard 20

This chapter describes the basic operation of your interactive whiteboard system and explains how to set up your remote control, retrieve system information, access the projector's image adjustment options and integrate your interactive whiteboard system with peripheral devices.

Using your projector

This section explains how to use your projector and its included remote control.

Using your remote control

The projector remote control enables you to access on-screen projector menus and change projector settings.

Replacing the remote control battery

Follow this procedure to replace the remote control battery.

WARNING

- Reduce the risk associated with a leaking battery in the projector's remote control by following these practices:
  - Use only the specified CR2025 coin-cell battery.
  - Remove the battery when the remote control is unused for an extended period.
  - Do not heat, disassemble, short or recharge the battery, or expose it to fire or high temperatures.
  - Avoid eye and skin contact with the battery if it has a leak.
- Dispose of the exhausted battery and product components in accordance with applicable regulations.

To replace the remote control battery

1. Hold down the side release on the left side of the battery holder and pull the battery holder completely out of the remote control.

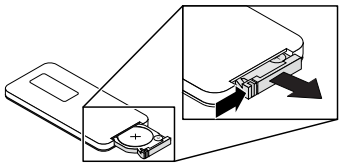

2. Remove the old battery from the battery holder and replace it with a CR2025 coin-cell battery.

   IMPORTANT

   Align the battery's positive (+) and negative (–) terminals with the correct signs on the battery holder.

3. Insert the battery holder into the remote control.

Using the remote control buttons

The projector remote control enables you to access on-screen menus and change projector settings. Use the **Power** ⏻ button on the remote control to put the projector into Standby mode or to turn it on. You can also use the **Input** button on the remote control to switch sources on the projector.

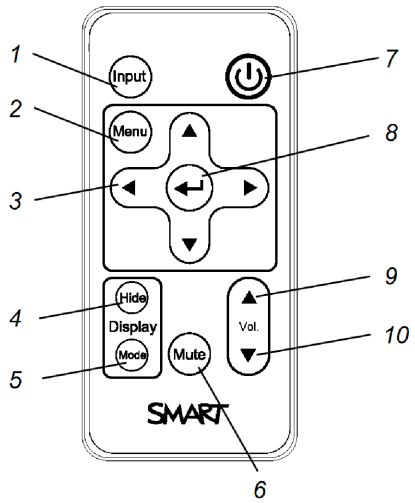

Number	Function	Description
1	Input	Select a video and audio input source on the projector and the associated USB input source on the ECP, if present.
2	Menu	Show or hide the projector menus.
3	◂ (Left), ▸ (Right), ▴ (Up) and ▾ (Down) arrows	Change the menu selections and adjustments.
4	Hide	Freeze, hide or display the image: • Press once to freeze the image. For example, you can display a question on the screen whilst you check your email. • Press again to hide the image, that is, to display a black screen. • Press again to return to the live image.
5	Mode	Select a display mode.
6	Mute	Mute audio amplification.
7	⏻ (Power)	Turn on the projector or put it into Standby mode.
8	↵ (Enter)	Accept the selected mode or option.
9	▴ (Volume Up)	Increase audio amplification volume.
10	▾ (Volume Down)	Decrease audio amplification volume.

NOTE

The **Mute**, **Volume Up** and **Volume Down** buttons work only if there is an audio source connected to the projector for the selected video input source.

Adjusting projector settings

The remote control's Menu button enables you to access the on-screen display to adjust the projector settings.

IMPORTANT

Keep your remote control in a safe place because there is no other way to access menu options.

Setting	Use	Notes
Image Adjustment menu		
Display Mode	Indicates the projector's display output (**SMART Presentation**, **Bright Room**, **Dark Room**, **sRGB** and **User**).	The default is **SMART Presentation**.
Brightness	Adjusts projector brightness from 0 to 100.	The default is 50.
Contrast	Adjusts the difference between the lightest and darkest parts of the image from 0 to 100.	The default is 50.
Frequency	Adjusts the display data frequency of the projected image from -5 to 5 to match the frequency of your computer's graphics card.	The default is 0. This setting applies to VGA inputs only.
Tracking	Synchronises your projector's display timing with your computer's graphics card from 0 to 63.	This setting applies to VGA inputs only.
H-Position	Moves the horizontal position of the source video left or right from 0 to 100 (relative to the projected image).	Don't adjust this setting unless you're advised to by SMART Support. Apply this setting only after you make all boom adjustments. This setting applies to VGA inputs only and is useful in situations where the source video is cut off.

Setting	Use	Notes
V-Position	Moves the vertical position of the source video up or down from -5 to 5 (relative to the projected image).	Don't adjust this setting unless you're advised to by SMART Support. Apply this setting only after you make all boom adjustments. This setting applies to VGA inputs only and is useful in situations where the source video is cut off.
White Peaking	Adjusts the image colour brightness from 0 to 10 whilst providing more vibrant white shades.	A value closer to 0 creates a natural image and a value closer to 10 enhances brightness. The default is 10.
Degamma	Adjusts the colour performance of the display from 1 to 3.	The default is 2.
Colour	Adjusts the Red, Green, Blue, Cyan, Magenta and Yellow colours on the projector from 0 to 100 to provide custom colour and luminance output.	Each colour has a default value of 100. Adjustments to the colour settings register under the User mode.
Audio menu		
Volume	Adjusts the projector's volume amplification from -20 to 20.	The default is 0.
Mute	Mutes the projector's audio output.	The default is off. If you mute the projector's audio output and then increase or decrease the volume, the volume is restored automatically. You can prevent this from happening by disabling the volume control.
Disable Volume Control	Disables the projector's volume control.	
Line out	Enables or disables the line out.	The default is on
Microphone	Enables or disables the microphone	The default is on
Speaker	Enables or disables the speaker	The default is on

Setting	Use	Notes
Projector Functions menu		
Auto Signal Detect	Enables or disables signal searching of input connectors.	The default is off. Select **On** to have the projector continuously switch inputs until it finds an active video source. Select **Off** to maintain signal detection in one input.
Lamp Reminder	Turns the lamp replacement reminder on or off.	This reminder appears 100 hours before the recommended lamp replacement.
Lamp Mode	Adjusts lamp brightness to **Standard** or **Economy**.	**Standard** displays a high-quality, bright image. **Economy** increases the lamp life by decreasing the brightness of the image.
Auto Power Off (minutes)	Sets the length of the auto power-off countdown timer between 1 and 240 minutes.	The default is 120 minutes. The timer begins to count down when the projector no longer receives a video signal. The timer finishes when the projector enters Standby mode. Select **0** to turn off the timer.
Zoom	Adjusts the zoom to the centre of the image in or out from 0 to 30.	The default is 0. Zooming in cuts off the outer edges of the source video.
Keystone	Adjusts the size of the top and bottom edge	Ensure that the top and bottom edges of the image are horizontal before you position the left and right edges of the image relative to your interactive whiteboard.
Projector ID	Displays the projector's unique ID number (from 0 to 99) within your organisation's network.	You can refer to or change this number when using the network remote management feature (see *Remotely managing your system through a network interface* on page 41).
Aspect Ratio	Adjusts the image output to **Fill Screen**, **Match Input** or **16:9**.	The default is **Fill Screen**. **Fill Screen** produces an image that fills the entire screen by stretching and scaling the source video to match the projector's native resolution and aspect ratio. **Match Input** displays the source video in its native resolution and aspect ratio. As a result, unused space could appear along the top and bottom edges of the screen (letterbox format) or along the left and right edges of the screen (pillarbox format). See *Video format* on page 73 for descriptions of each mode.

Setting	Use	Notes
Startup Screen	Selects the type of startup screen (**SMART**, **Capture User Startup Screen**, **Preview Startup Screen**), or Image Alignment Screen.	This screen displays when the projector lamp is starting and a video source signal isn't displayed. **SMART** displays the default SMART logo on a blue background. **Capture User Startup Screen** closes the on-screen display menu and captures the entire projected image. The captured image is displayed the next time the on-screen display opens. (The capture can take up to one minute, depending on the complexity of the background graphic.) **Preview Startup Screen** enables you to preview the default or captured startup screen. **Image Alignment Screen** enables you to adjust the projected image size, shape and location.
Image Alignment Screen	Enables you to adjust the projected image size, shape and location.	The image alignment screen appears the first time you start your projector. However, you can access it from the startup screen menu any time. Press **Menu** or **Enter** to close it.
Network menu		
Network and VGA Out	Activates the projector's RJ45 (8P8C) connector and network features.	
Status	Displays the current network status (**Connected**, **Disconnected** or **Off**).	The default is off.
DHCP	Displays the status of the network's Dynamic Host Configuration Protocol (DHCP) as **On** or **Off**.	The default is on. **On** enables a DHCP server on the network to automatically assign an IP address to the projector. **Off** enables an administrator to assign an IP address manually.
Password Reminder	Emails the network password to the predefined email recipient.	See *Webpage management* on page 41 to set up a destination email address.

Setting	Use	Notes
IP Address	Displays the projector's current IP address in values between 0.0.0.0 and 255.255.255.255.	To change the projector's IP address, use the RS-232 connector (see *Network information* on page 61) or use a DHCP server to assign a dynamic IP address and then set a static IP address using the network remote management feature (see *Remotely managing your system through a network interface* on page 41).
Subnet Mask	Displays the projector's subnet mask number in values between 0.0.0.0 and 255.255.255.255.	
Gateway	Displays the projector's default network gateway in values between 0.0.0.0 and 255.255.255.255.	
DNS	Displays the projector's primary domain name server (DNS) IP address in values between 0.0.0.0 and 255.255.255.255.	
MAC Address	Displays the projector's MAC address in xx-xx-xx-xx-xx-xx format.	
Group Name	Displays the projector's workgroup name as set by an administrator (maximum 12 characters).	You can set the projector's workgroup name using the remote management features (see *Remotely managing your system through a network interface* on page 41 and *Remotely managing your system through an RS-232 serial interface* on page 49).
Projector Name	Displays the projector's name as set by an administrator (maximum 12 characters).	You can set the projector's name using the remote management features (see *Remotely managing your system through a network interface* on page 41 and *Remotely managing your system through an RS-232 serial interface* on page 49).
Location	Displays the projector's location as set by an administrator (maximum 16 characters).	You can set the projector's location using the remote management features (see *Remotely managing your system through a network interface* on page 41 and *Remotely managing your system through an RS-232 serial interface* on page 49).

Setting	Use	Notes
Contact	Displays the contact name or number for projector support as set by an administrator (maximum 16 characters).	You can set the contact name or number using the remote management features (see *Remotely managing your system through a network interface* on page 41 and *Remotely managing your system through an RS-232 serial interface* on page 49).
Language menu		
Language	Selects language preference.	Projector menu support is available in English (default), Chinese (Simplified), Chinese (Traditional), Czech, Danish, Dutch, Finnish, French, German, Greek, Italian, Japanese, Korean, Norwegian, Polish, Portuguese (Brazil), Portuguese (Portugal), Russian, Spanish and Swedish.
Information menu		
Lamp Hours	Displays the current number of lamp usage hours from 0 to 4000 hours from when it was last reset.	Always reset the lamp hours after you replace a lamp, because lamp service reminders are based on the current hours of use. See *Resetting the lamp hours* on page 27 for details on the lamp hours reset procedure.
Input	Displays the currently displayed video input source (**VGA-1**, **VGA-2**, **HDMI** or **None**).	
Resolution	Displays the projector's most recently detected video source signal resolution and refresh rate.	If there is no current video input source signal, this setting displays the last known source signal image resolution and refresh rate.
Firmware Version	Displays the projector's digital display processor (DDP) firmware version in x.x.x.x format.	
MPU Version	Displays the projector microprocessor unit (MPU) firmware version in x.x.x.x format.	
Network Version	Displays the projector's network communications processor firmware version in x.x.x.x format.	If you haven't enabled the **Network and VGA Out** setting, this setting is unable to display the projector's network communications processor firmware version and displays 0.0.0.0 instead.
Model Number	Displays the projector's model number.	
Serial Number	Displays the projector's serial number.	

Focusing the image

Use the focus lever located on the projector lens to focus the projected image.

To focus the image

Rotate the focus ring clockwise or anti-clockwise until the image is in focus.

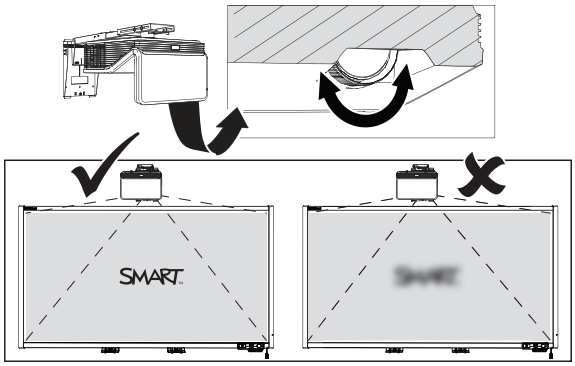

Adjusting the image

Refer to these notes when adjusting the projected image, as described in the SMART Board *M600i6* interactive whiteboard system *installation guide* included (smarttech.com/kb/170555).

- Whilst adjusting the projected image size, shape and location, use the projector's default background so that you can see the full projected image clearly. Don't use other images, which might be cropped or scaled by the projector and could result in a misleading projected image size, shape and location.
- Use the mechanical adjustments described in the installation document to make all physical image adjustments. Don't use the projector's on-screen menu options during the projector alignment process.
- Be aware that as you tilt the projector up or lower its mounting boom to raise the image, the entire projected image increases or decreases in size, especially at the bottom of the projected image.
- When adjusting keystone (tilt), ensure that the top and bottom edges of the image are horizontal before you position the left and right edges of the image relative to your interactive whiteboard.
- When you move the projector forward or backward on the boom to make the image larger or smaller, you might need to tilt or turn the projector slightly to keep the image square. Loosen the lever slightly to aid in this adjustment.
- To fine-tune the image, you might need to repeat all steps described in the installation document in smaller increments.

Projector connection diagram

You can connect a variety of peripheral devices to your projector, including DVD/Blu-ray players, VCRs, document cameras, digital cameras and high-definition sources, as well as peripheral device outputs, such as a secondary projector or a flat-panel display and powered speakers.

NOTE

You might need to purchase third-party adapters to connect certain peripheral devices.

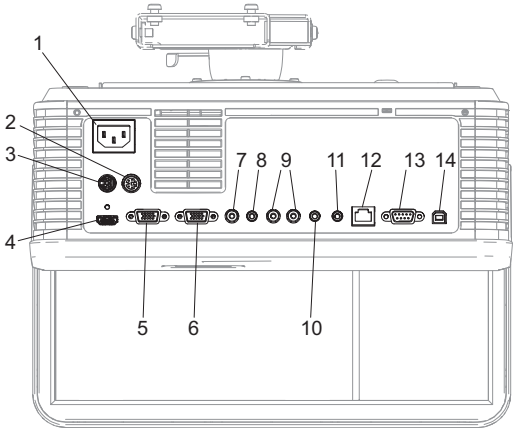

No.	Connector	Connect to:
1	Power	Mains power supply
2	7-pin mini-DIN	[Not used]
3	4-pin power mini-DIN 5V/2A output	[Not used]
4	HDMI input	High-definition video and audio source (not included)
5	DB15F (DE-15F) RGB video input (VGA 1)	Primary computer (not included)
6	DB15F (DE-15F) RGB video output (VGA Out)	Secondary display (not included)
7	RCA Composite video input	
8	3.5mm phone jack audio input (×2)	Audio sources associated with primary and secondary computers
9	Left and right RCA audio input	Audio source (not included)
10	3.5mm phone jack audio output	Speakers (not included)
11	3.5 mm phone jack microphone	Microphone (not included)
12	RJ45 (8P8C)	Network (for webpage management and SNMP access)
13	DB9F (DE-9F) RS-232	
14	USB B	Computer (for service access only)

NOTES

- To connect your interactive whiteboard, see the SMART Board *M600i6* interactive whiteboard system *installation guide* (smarttech.com/kb/170555).
- To connect accessories to your interactive whiteboard, refer to the documents included with the accessories and consult the SMART Support website (smarttech.com/support) for additional information.

Using your interactive whiteboard

Refer to the SMART Board *M600i6* interactive whiteboard *user's guide* (smarttech.com/kb/170410) for in-depth information on using your interactive whiteboard and its features.

When you connect your SMART Board interactive whiteboard to a computer with SMART software, you can access the full capabilities of your interactive whiteboard.

For additional resources, go to smarttech.com, click the flag icon in the top right-hand corner and then select your country and language. In the Support section of this website, you'll find up-to-date, product-specific information, including setup instructions and specifications.

The SMART training website (smarttech.com/training) includes an extensive library of training resources that you can refer to when first learning to set up or use your interactive whiteboard system.

Chapter 4

Maintaining your interactive whiteboard system

Maintaining your interactive whiteboard 21
Preventing damage to your interactive whiteboard 21
Keeping the writing surface clean 22
Cleaning the projector 22
Focusing and adjusting the projector image 23
Replacing the projector lamp 23
Removing and replacing the projector lamp module 23
Resetting the lamp hours 27

This chapter includes methods for properly cleaning and preventing damage to your SMART Board M600i6 interactive whiteboard system.

Maintaining your interactive whiteboard

For information on maintaining your interactive whiteboard, see the SMART Board *M600* interactive whiteboard *installation guide* (smarttech.com/kb/170555).

With proper care, your SMART Board interactive whiteboard will provide years of trouble-free service.

Preventing damage to your interactive whiteboard

Although the surface of your interactive whiteboard is very durable, take the following precautions to prevent damage.

- Don’t use sharp or pointed objects, such as ballpoint pens or pointers, as writing tools.
- Replace the pen nib when the nib wears out.
- Don’t use low-odour dry-wipe markers because they can be very difficult to erase. Use standard (high-odour) dry-wipe markers that show a warning to use them only in well-ventilated areas.
- Don’t use adhesive tape on the interactive surface.
- Don’t use abrasive erasers or harsh chemicals to clean your product.

- The digital cameras located in the corners of the frame are protected from dust and dirt by windows. In extremely dusty environments, spray a proprietary household, alcohol-free glass cleaner onto a cotton swab and rub it gently on the windows. Don't use compressed air to clean the cameras.

Keeping the writing surface clean

Follow these tips to keep the interactive whiteboard's surface clean.

- Clean your interactive whiteboard at least every six months.
- Don't spray cleaner directly onto the interactive whiteboard's surface. Instead, spray a light amount of cleaner onto a cloth and then gently wipe the interactive surface.

IMPORTANT

Turn off your interactive whiteboard system before you clean it so that you do not scramble the desktop icons or inadvertently activate applications when you wipe the interactive surface.

TIP

To view dirt or streaks more easily, set your projector to Standby (lamp off) mode.

Cleaning the projector

WARNING

Cleaning a wall-mounted projector can result in a fall or injury. Use caution when climbing a ladder and consider removing the projector from its wall-mounting bracket to clean it.

CAUTION

- Never touch the mirror with your hands or a brush, and do not scrub the surface of the mirror with the supplied cleaning cloth. Instead, use the supplied cleaning cloth to clean the mirror with a light touch, and do not put any cleaning solvents on the cloth or the mirror. Do not apply pressure to the projector lens or mirror.
- Before you clean the projector, press the **Power** ⏻ button twice on the remote control to put the system in Standby mode and then allow the lamp to cool for at least 30 minutes.
- Do not spray cleaners, solvents or compressed air directly on the projector. Do not use spray cleaners or solvents near any part of the projector because they can damage or stain the unit. Spraying the system could spread a chemical mist on some of the projector's components and lamp, resulting in damage and poor image quality.
- Do not allow liquids or commercial solvents of any kind to flow into the projector base or head.

IMPORTANT

- When cleaning the interactive whiteboard system:
  - Wipe the exterior of the projector with a lint-free cloth.
  - If necessary, use a soft cloth moistened with a mild detergent to clean the projector housing.
- Do not use abrasive cleaners, waxes or solvents.

When cleaning the projector's mirror:

- Use a bellows bulb or air blower bulb (commonly found in audio-visual supply stores) to blow off dust. Never touch the mirror with your bare hands or a brush.
- If wiping the mirror is unavoidable, wear protective gloves and gather the cleaning cloth into a ball. Gently run the cleaning cloth across the mirror as you would a feather duster. Don't apply any pressure to the lens or mirror.

When cleaning the projector's lens:

- Use a bellows bulb or air blower bulb (commonly found in audio-visual supply stores) to blow off dust. Never touch the lens with your bare hands or a brush.
- If wiping the lens is unavoidable, wear protective gloves and gather the cleaning cloth into a ball. Gently run the cleaning cloth across the lens from the centre to the edge, using the cleaning cloth as you would a feather duster. Don't apply any pressure to the lens or mirror.

Focusing and adjusting the projector image

For information on focusing and adjusting the projector image, see *Focusing the image* on page 18 and *Adjusting the image* on page 18.

Replacing the projector lamp

This section provides instructions for replacing the projector lamp module.

Removing and replacing the projector lamp module

Eventually the lamp will dim and a message will appear reminding you to replace it. Make sure that you have a replacement lamp module before proceeding with the following instructions.

WARNING

- See smarttech.com/compliance for the projector's MSDS documents.
- Replace the lamp module when the projector displays its lamp life warning message. If you continue to use the projector after this message appears, the lamp can shatter or burst, scattering glass throughout the projector.
- If the lamp shatters or bursts, leave and then ventilate the area.

  Next do the following:

  - Avoid touching the glass fragments because they can cause injury.
  - Wash your hands thoroughly if you have come into contact with lamp debris.
  - Thoroughly clean the area around the projector, and discard any edible items placed in that area because they could be contaminated.
  - Call your authorised SMART reseller for instructions. Do not attempt to replace the lamp.
- Replacing the lamp module in a wall-mounted projector can result in a fall or injury. Use caution when climbing a ladder, and consider removing the projector from the wall-mounting bracket to replace the lamp module.
- Uncovering the lamp whilst the projector is mounted on the wall-mounting bracket can lead to product damage or personal injury from falling pieces of glass if the lamp is broken.
- When replacing the projector lamp module:
  - Put the projector into Standby mode and wait 30 minutes for the lamp to cool completely.
  - Do not remove any screws other than those specified in the lamp replacement instructions.
  - Wear protective eyewear whilst changing the lamp module. Failure to do so can cause injuries including loss of eyesight if the lamp shatters or bursts.
  - Use only replacement lamp modules approved by SMART Technologies. Contact your authorised SMART reseller for replacement parts.
  - Never replace the lamp module with a previously used lamp module.
  - Always handle the fragile lamp assembly with care to prevent premature lamp failure or exposure to mercury. Use gloves when touching the lamp module. Do not touch the lamp with your fingers.
  - Recycle or dispose of the lamp module as hazardous waste in accordance with local regulations.

You need a Phillips No. 2 screwdriver and a flat screwdriver to complete these procedures.

To remove the old lamp module

1. Press the **Power** button twice on the remote control to put the projector into Standby mode.
2. Wait at least 30 minutes for the projector to cool down.
3. Disconnect the power cable from the projector.
4. Use a Phillips screwdriver to loosen the two captive screws.

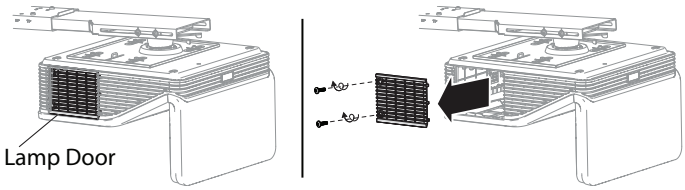

5. Use a Phillips screwdriver to loosen the two captive screws from the bottom of the lamp module and gently remove the lamp module.

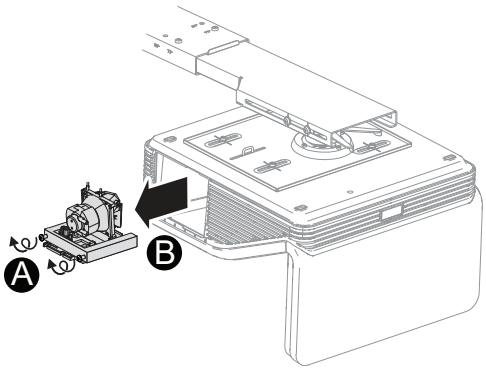

NOTE

Don’t try to remove these screws. Captive screws can’t be removed, only loosened.

To put the new lamp module into the projector

1. Remove the new lamp module from its packaging.
2. Carefully place the lamp module into the projector and gently press the power end of the lamp module against the projector to ensure that the power plug makes contact with the projector's power port.

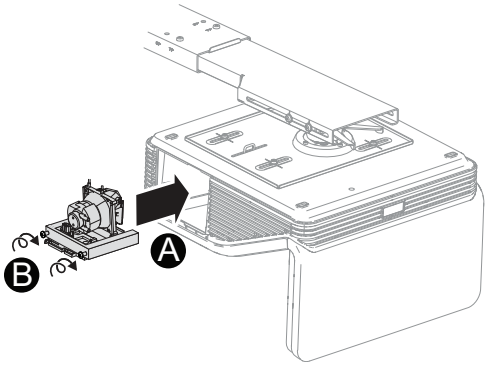

NOTE

You should be able to place the lamp module into the projector easily without applying much force.

3. Use the Phillips screwdriver to secure the captive screws.

IMPORTANT

Do not over-tighten the screws.

4. Replace the lamp cover.
5. Connect the power cable to the wall socket.
6. Press the **Power** button once on the remote control to confirm that the projector is operating and that the lamp module is correctly installed.
7. Put the old lamp module in a secure container and handle it gently until you recycle it.

To finish the projector lamp module installation

1. Turn on the projector.
2. Adjust the projector image if necessary (see *Adjusting the image* on page 18).
3. Access the service menu to reset the lamp hours (see *Resetting the lamp hours* on the next page).
4. Activate the projector's alert emails and lamp warnings if they've been deactivated (see *Email alerts* on page 46 and *Control panel* on page 42).

Resetting the lamp hours

Once you have replaced the lamp module, you need to access the projector service menu to reset the lamp hours. To prevent accidental errors, only a system administrator should perform this procedure.

> **NOTE**
>
> Always reset the lamp hours after you replace the lamp, because lamp service reminders are based on the current hours of use.

To reset the lamp hours

1. Using the remote control, press the following buttons quickly to access the service menu: **Down**, **Up**, **Up**, **Left**, **Up**.

   > **CAUTION**
   >
   > Do not adjust any settings in the service menu other than those listed in this guide. Changing other settings can damage or affect the operation of your projector and may invalidate your warranty.

2. Scroll down to *Lamp Hour Reset* and then press **OK**.

   Both *Lamp Hour* values (Standard and Economy) reset to zero.

   > **CAUTION**
   >
   > Do not reset the lamp hours unless you have just replaced the lamp module. Resetting the lamp hours on an old lamp can damage your projector as a result of lamp failure.

   > **NOTE**
   >
   > You're unable to reset the *Display Hour* value because it's the running total of hours that the projector has been in use.

3. Press the **Menu** button on the remote control.

   The *SMART UF70 Settings* menu appears.

4. Select to confirm that *Lamp Hour* is reset to zero.

Chapter 5

Troubleshooting your interactive whiteboard system

Before you start 30
Locating status lights 30
Locating serial numbers 30
Determining your interactive whiteboard system's status 31
Resolving interactive whiteboard issues 32
Resolving operation issues 32
Resolving projector issues 33
Resolving projector errors 33
Your projector stops responding 33
The "Projector Overheated", "Fan Failure", "Lamp Failure" or "Colour Wheel Failure" message appears 33
The "Lamp Failure" message appears 34
The projector Power and Service lights are off 34
Resolving image issues 34
Loss of signal 35
Partial, scrolling or incorrectly displayed image 35
Unstable or flickering image 36
Frozen image 37
Your image doesn't fit the interactive whiteboard 37
The image from your connected laptop computer isn't projected 37
Unaligned projected image 37
Resolving audio issues 38
Resolving network communication issues 38
Accessing the service menu 39
Retrieving your password 39
Resetting the projector 40
Transporting your interactive whiteboard system 40

This chapter provides basic troubleshooting information for your interactive whiteboard system.

For issues not covered in this chapter, consult the SMART Support website (smarttech.com/support) or contact your authorised SMART reseller (smarttech.com/where).

Before you start

Before you troubleshoot your interactive whiteboard system or contact SMART Support or your authorised SMART reseller for assistance, you need to do the following:

- Locate your interactive whiteboard system's status lights
- Locate your interactive whiteboard system's serial numbers

Locating status lights

Your interactive whiteboard system consists of several components, which have their own status lights:

- The **Select** button on your interactive whiteboard's pen tray also functions as a status light.
- Your projector's Power ⏻ and Service 🔧 lights are located on the bottom of the projector.

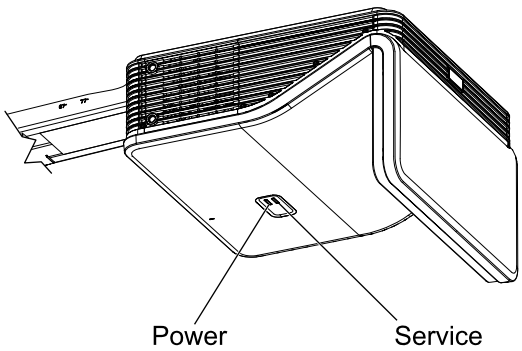

Locating serial numbers

The SMART Board M600 interactive whiteboard serial number is located on the lower right-hand edge of the frame, as well as on the back of the interactive whiteboard. For more information, see the *SMART Board M600 series interactive whiteboard user's guide* (smarttech.com/kb/170410).

The SMART UF70 and UF70w projector's serial number is located on the top of the projector.

For the locations of serial numbers on other components and accessories, see smarttech.com/support.

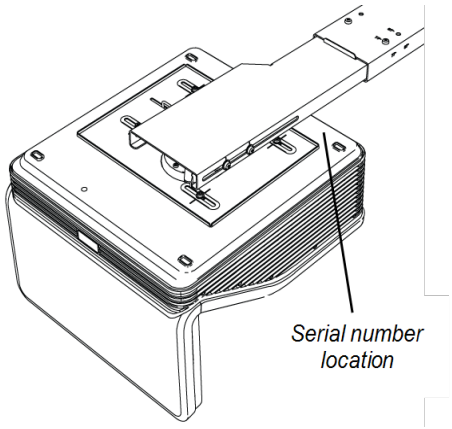

Determining your interactive whiteboard system's status

Use the following table to determine the status of your interactive whiteboard system.

Projector Power light	Projector Service light	Pen tray Select button status light	Projected image	Touch and pen control	Status and related troubleshooting
Normal operating statuses					
Solid green	Off	Solid white	Correct	Full control	The system is operating normally. If image or sound issues occur, see the remaining sections of this chapter for troubleshooting information.
Flashing green	Off	Off	None	None	The system is starting up.
Solid amber	Off	Off	None	None	The system is in Standby mode.
Flashing amber	Off	Off	None	None	The system is entering Standby mode.
Solid green	Off	Solid amber	N/A	None	The interactive whiteboard's controller module is ready to receive a firmware update or is applying a firmware update.
Error statuses					
Solid green	Off	Solid white	Incorrect	Full control	There's an issue with the projected image. See *Resolving image issues* on page 34.
Solid green	Off	Solid white	Correct	None	There's an issue with the interactive whiteboard. See *Resolving operation issues* on the next page.
Solid green	Off	Flashing white	Correct	Touch only	SMART Product Drivers isn't installed or isn't running correctly on the connected computer.

Projector Power light	Projector Service light	Pen tray Select button status light	Projected image	Touch and pen control	Status and related troubleshooting
Solid green	Off	Off	N/A	None	There's an issue with the connections between the interactive whiteboard and the other components of the system. See *Resolving interactive whiteboard issues* below.
Solid amber	Flashing red	N/A	None	N/A	There's an issue with the projector lamp. See *The "Lamp Failure" message appears* on page 34.
Off	Flashing red	Off	None	None	The projector's operating temperature has been exceeded. See *The "Projector Overheated", "Fan Failure", "Lamp Failure" or "Colour Wheel Failure" message appears* on the next page.
Off	Solid red	N/A	None	N/A	There's an issue with the projector's fan or colour wheel. See *The "Projector Overheated", "Fan Failure", "Lamp Failure" or "Colour Wheel Failure" message appears* on the next page.
Off	Off	Off	None	None	The projector power cable isn't properly connected. OR There's an issue with the mains power supply (for example, the circuit breaker is off).

Resolving interactive whiteboard issues

This section includes information on resolving issues with your interactive whiteboard.

For information not covered in this section, see the SMART Board *M600 series* interactive whiteboard *user's guide* (smarttech.com/kb/170410).

Resolving operation issues

To resolve operation issues, complete the following tasks:

- Confirm that all cables are securely connected to the back of the pen tray, computer and control module.
- Perform the calibration procedure documented in the SMART Board *M600 series* interactive whiteboard *user's guide* (smarttech.com/kb/170410).
- Reset the interactive whiteboard system by disconnecting the power cable from the wall socket and then connecting it.
- If necessary, complete additional troubleshooting with the guidance of SMART Support using SMART Board Diagnostics.

- Confirm that the USB cable is properly connected from a fully functional USB port on the computer to the interactive whiteboard.

Resolving projector issues

Resolving projector errors

System administrators can resolve the following projector errors on their own prior to contacting SMART Support. Performing initial troubleshooting on your projector reduces the time of a support call.

Your projector stops responding

If your projector stops responding, perform the following procedure.

To restart an unresponsive projector

1. Put the projector into Standby mode and then wait 30 minutes for it to cool down.
2. Disconnect the power cable from the power socket and then wait at least 60 seconds.
3. Connect the power cable and then turn on the projector.

The “Projector Overheated”, “Fan Failure”, “Lamp Failure” or “Colour Wheel Failure” message appears

If the “Projector Overheated”, “Fan Failure” or “Colour Wheel Failure” message appears and the projector stops projecting an image, one of the following issues is occurring:

- The temperature is overheating but the “Projector Overheated” message fails to display.
- The temperature outside the projector is too high.
- One of the fans has failed.
- The projector has a colour wheel issue.

To resolve the “Projector Overheated”, “Fan Failure”, or “Colour Wheel Failure” error

1. Put the projector into Standby mode and then wait 30 minutes for it to cool down.
2. If your room is hot, lower the temperature if possible.
3. Ensure that nothing is blocking the projector’s air intake and exhaust.
4. Disconnect the power cable from the power socket and then wait at least 60 seconds.
5. Connect the power cable and then turn on the projector.
6. Adjust the fan speed using the service menu.
7. If the previous steps don’t resolve the issue, put the projector into Standby mode, disconnect the power cable and then contact your authorised SMART reseller.

The “Lamp Failure” message appears

If the “Lamp Failure” message appears, one of the following issues is occurring:

- The lamp is overheating, likely due to blocked air vents.
- The lamp has reached the end of its life.
- The projector has an internal problem.

To resolve the “Lamp Failure” error

1. Restart the projector (see *Your projector stops responding* on the previous page).
2. Check the remaining lamp hours using the on-screen menu (see *Adjusting projector settings* on page 12).

   If the lamp has more than 2000 hours of use in Standard mode or 3000 hours of use in Economy mode, it’s near the end of its lifespan.
3. Replace your lamp module as described in *Removing and replacing the projector lamp module* on page 23.
4. If replacing the lamp module doesn’t resolve the issue, put the projector into Standby mode, disconnect the power cable and then contact your authorised SMART reseller.

The projector Power and Service lights are off

If the projector Power and Service lights are both off, one of the following issues is occurring:

- There was a power outage or a power surge.
- A circuit breaker or a safety switch was tripped.
- The projector isn’t connected to the power source.
- The projector has an internal problem.

To resolve the unlit projector Power and Service lights issue

1. Check the power source and then make sure that all cables are connected.
2. Confirm that the projector is connected to an active power socket.
3. Make sure that the pins on the connectors aren’t broken or bent.
4. Connect the power cable and then turn on the projector.
5. If the previous steps don’t resolve the issue, disconnect the power cable and then contact your authorised SMART reseller.

Resolving image issues

To resolve common image issues, complete the following tasks:

- Ensure that the computer or other video source is on and set to display a resolution and refresh rate supported by the projector (see *Video format* on page 73).

- Ensure that the video source is properly connected to the projector.
- Press the **Input** button on the remote control or the **Input Select** button on the pen tray to switch to the correct video source.

If these tasks don't resolve the issue, refer to the following sections for additional troubleshooting information.

Loss of signal

If a video source signal isn't detected, if it's out of range of the projector's support video modes or if the signal is being switched to a different device or input, the projector doesn't show a source signal and instead displays the SMART logo on a blue screen.

To resolve signal loss issues

1. Wait approximately 45 seconds for the image to synchronise. Some video signals require a longer synchronisation period. Cycling back through inputs to the one that you want also helps image synchronisation.
2. If the image doesn't synchronise, check your cable connections to the projector.
3. Ensure that the image signal is compatible with the projector (see *Video format* on page 73).
4. If there are any extension cables, switch boxes, connection wall plates or other devices in the video connection from the computer to the projector, temporarily remove them to ensure they aren't causing the video signal loss.
5. If your projector still doesn't show a source signal, contact your authorised SMART reseller.

Partial, scrolling or incorrectly displayed image

NOTE

This procedure may vary depending on your version of Windows® operating system or Mac OS X operating system software and your system preferences. The following procedures apply to Windows 7 operating systems and Mac OS X 10.8 operating system software.

To resolve a partial, scrolling or incorrectly displayed image on your Windows computer

1. Select **Start > Control Panel**.
2. Click **Display** and then select **Adjust resolution**.
3. Verify that your display resolution setting is 1024 × 768 (SMART UF70 projector), 1280 × 800 (SMART UF70w projector in 16:10 aspect ratio mode) or 1280 × 720 (SMART UF70w projector in 16:9 aspect ratio mode).
4. Click **Advanced settings** and then click the **Monitor** tab.
5. Verify that the screen refresh rate is 60 Hz.

To resolve a partial, scrolling or incorrectly displayed image on your Mac computer

1. Select **Apple Menu > System Preferences**.

   The *System Preferences* dialogue box appears.
2. Click **Displays**.
3. Verify that your display resolution setting is 1280 × 800 (WXGA).
4. Verify that the screen refresh rate is 60 Hz.

Unstable or flickering image

If the projector's image is unstable or flickering, the frequency or tracking settings on your input source could be different from the settings on your projector.

> **IMPORTANT**
>
> Write down your setting values before adjusting any of the settings in the following procedure.

To resolve your unstable or flickering image

1. Check the display mode of your computer's graphics card. Make sure it matches one of the projector's compatible signal formats (see *Video format* on page 73). Refer to your computer's manual for more information.
2. Configure the display mode of your computer's graphics card to make it compatible with the projector. Refer to your computer's manual for more information.
3. Adjust the frequency, tracking, H-position and V-position settings in the on-screen menu. See *Adjusting projector settings* on page 12.
4. Optionally, reset the projector as described in *Resetting the projector* on page 40 to adjust the frequency and tracking to their original values.

   > **IMPORTANT**
   >
   > This action resets all values to their defaults.

Frozen image

If your projector has a frozen image, perform the following procedure.

To resolve a frozen image

1. Ensure that the Hide Display feature is off.
2. Press the **Hide** button on the projector's remote control to hide or show the display.
3. Ensure that your source device, such as your DVD player or computer, isn't malfunctioning.
4. Put the projector into Standby mode and then wait 30 minutes for it to cool down.
5. Disconnect the power cable from the power socket and then wait at least 60 seconds.
6. Connect the power cable and then turn on the projector.
7. If the previous steps don't resolve the issue, contact your authorised SMART reseller.

Your image doesn't fit the interactive whiteboard

If you're using a SMART UF70w projector with a wide screen interactive whiteboard, verify that you're using the correct aspect ratio mode for the interactive whiteboard:

Interactive whiteboard	Aspect ratio mode
SMART Board M685 interactive whiteboard	16:10

You can set the aspect ratio mode using the Native DLP Resolution setting in the Projector Functions menu (see *Adjusting projector settings* on page 12).

The image from your connected laptop computer isn't projected

Laptop computer settings can interfere with projector operations.

Some laptop computers deactivate their screens when you connect a secondary display. Refer to your computer's manual for details on reactivating the computer's display screen.

Unaligned projected image

Alignment errors occur when the projected image isn't perpendicular to the screen. Alignment errors can occur when you mount your interactive whiteboard system on an uneven surface or a wall that has obstructions, or if you swivel the projector too far from the vertical center of your interactive whiteboard.

Use the SMART Board *M600i6* interactive whiteboard system *installation guide* (smarttech.com/kb/170555) to eliminate most image alignment issues.

The projector image can slip if the projector is moved often or installed in a location prone to vibration, such as next to a heavy door. Follow these precautions to help prevent the image from becoming unaligned:

- Make sure that the installation wall is plumb and square and doesn't move or vibrate excessively.

- Make sure that there are no obstructions behind the projector's wall-mounting bracket and that the bracket is firmly secured to the wall according to the installation instructions.
- Adjust the projected image. See the SMART Board *M600i6* interactive whiteboard system *installation guide* (smarttech.com/kb/170555) and *Adjusting the image* on page 18.

Resolving audio issues

NOTE

You might need to configure your computer to pass audio through HDMI if it isn't configured automatically.

To resolve audio issues

1. Ensure that the speakers' or audio system's cables are properly connected to the audio output plug on the projector's connection panel.
2. Press the **Mute** button on the projector's remote control and if Audio Mute is on turn it off.
3. Use the projector's remote control to ensure that the volume isn't at the lowest setting.
4. Ensure that your speaker or audio system is on and that the volume is turned up.
5. Check that your source input, such as your computer or video device, isn't malfunctioning. Ensure that its audio output is on and that the volume isn't set to the lowest position.

   NOTE

   You must display the source input's video to play its audio through the connected speakers or audio system.

6. If the previous steps don't resolve the issue, contact your authorised SMART reseller.

Resolving network communication issues

If you don't have network access, perform the following procedure to troubleshoot your system.

To resolve network communication issues

1. Ensure that your network cable is properly connected to the RJ45 connection on the projector's connection panel. There are two RJ45 ports: one is for the network and one is for projector 2. Ensure that the network cable is connected to the correct one.
2. Ensure that the LAN warning light on the projector is green. To activate the projector's network features, use the "vgaoutnetenable=on" RS-232 command (see *Projector programming commands* on page 51) or enable the **Network and VGA Out** setting (see *Adjusting projector settings* on page 12). The network features on the projector don't work until you complete one of these tasks.

3. Press the **Menu** button and then select the **Network Settings** menu to check the IP address. See *Adjusting projector settings* on page 12 for a description of the IP address field. Enter this IP address into your browser or SNMP agent.
4. If you still don't have network access, contact your network administrator. If your administrator is unable to resolve the issue, contact your authorised SMART reseller.

Accessing the service menu

CAUTION

- To prevent tampering or unintentional changes, only system administrators should access the service menu. Do not share the service menu access code with casual users of your interactive whiteboard system.
- Do not adjust any settings in the service menu other than those listed in this guide. Changing other settings can damage or affect the operation of your projector and may invalidate your warranty.

Retrieving your password

If you forget the projector's password, you can retrieve it by accessing the projector service menu directly from the projector or from the password settings menu on your projector's webpage (see *Password settings* on page 47).

To retrieve your password from the service menu

1. Using the remote control, press the following buttons quickly to access the service menu: **Down**, **Up**, **Up**, **Left**, **Up**.
2. Scroll to *Password Get* and then press **Enter** on the remote control.

   The password appears on the screen.
3. Write down the password.
4. Scroll to *Exit* and then press **Enter** on the remote control to exit the projector service menu.

Resetting the projector

At some point during troubleshooting, you might need to reset all projector settings.

IMPORTANT

This action is irreversible.

To reset all projector settings

1. Using the remote control, press the following buttons quickly to access the service menu: **Down**, **Up**, **Up**, **Left**, **Up**.
2. Scroll to *Factory Reset* and then press **Enter** on the remote control.
3. Scroll to *Exit* and then press **Enter** on the remote control to exit the projector service menu.

Transporting your interactive whiteboard system

Save your original interactive whiteboard system packaging so that it's available if you need to transport your interactive whiteboard system. When required, repack it with all of the original packaging. This packaging was designed to provide optimal shock and vibration protection. If you no longer have your original packaging, purchase the same packaging directly from your authorised SMART reseller.

If you prefer to use your own packaging materials, make sure that you adequately protect your unit. Make sure that the projector lens and mirror are protected against any physical contact or pressure which may damage the projector's optics. Send your interactive whiteboard in an upright position to deter carriers from placing heavy objects on it.

Appendix A
Remotely managing your system through a network interface

Webpage management 41
Accessing webpage management 42
Home 42
Control panel 42
Network settings 45
Email alerts 46
Password settings 47
Simple Network Management Protocol (SNMP) 48

This appendix includes detailed instructions on how to remotely manage your SMART Board M600i6 interactive whiteboard system settings through a network interface.

Webpage management

You can access advanced setup features via the projector's webpage. This webpage enables you to manage the projector from a remote location using any computer connected to your intranet.

NOTE

To access the webpage, your browser must support JavaScript. Most commonly used browsers like Internet Explorer®, Chrome™ and Firefox® support JavaScript.

Accessing webpage management

Before you can access the webpage, connect your projector to the network and then enable the projector's network functions using the projector's menu. An IP address appears on the on-screen display.

To use the management webpage

1. Start your Internet browser.
2. Type the IP address in the address box and then press ENTER.

   The *SMART UF70 Projector Settings* window appears.
3. Select the menu options in the left pane to access the settings on each page.
4. Modify settings using your computer's mouse and keyboard, and then click **Submit** or another action button next to each setting you change.

Home

The Home menu page displays basic projector information and enables you to select the on-screen display language.

NOTE

You can view basic projector information but you're unable to change it (with the exception of the on-screen display language) from the Home menu page.

Submenu setting	Description
Language	Displays language options
Projector Information	Displays current projector information

Control panel

This menu enables you to manage the projector audio and video status, alerts and appearance using an Internet browser.

Submenu setting	Description
Power	Turns the projector on or puts it into Standby mode. Select the **Power ON** or **Power OFF** button.
Restore All Projector Defaults	Returns projector settings to default values or refreshes the current settings. Select **Submit** or **Refresh**. **IMPORTANT** The **Submit** option is irreversible and resets all values.
Volume	Adjusts the projector's volume from -20 to 20.

Submenu setting	Description
Mute	Turns the mute settings on or off. Select **On** to mute the projector's sound and **Off** to turn off mute.
Volume Control	Enables volume control. Select **On** to enable volume adjustment and select **Off** to disable volume adjustment if you prefer to use your audio system or speaker (not included) controls.
Closed Captioning	Turns the closed captioning feature on or off.
Language	Sets the closed captioning language to **CC1** or **CC2**. Typically, **CC1** displays US English subtitles, whilst **CC2** displays other regional languages, such as French or Spanish, depending on television channel or media setup.
Display Mode	Adjusts the display output to **SMART Presentation**, **Bright Room**, **Dark Room**, **sRGB** and **User** modes so that you can project images from various sources with consistent colour performance: • **SMART Presentation** is recommended for colour fidelity. • **Bright Room** and **Dark Room** are recommended for locations with those conditions. • **sRGB** provides standardised accurate colour. • **User** enables you to apply your own settings.
Brightness	Adjusts projector brightness from 0 to 100.
Contrast	Adjusts the difference between the lightest and darkest parts of the image from 0 to 100.
Frequency	Adjusts the display data frequency of the projected image from -5 to 5 to match the frequency of your computer's graphics card.
Tracking	Synchronises your projector's display timing with your computer's graphics card from 0 to 31.
Sharpness	Adjusts the projected image's sharpness from 0 to 31.
White Peaking	Adjusts the image colour brightness from 0 to 10 whilst providing more vibrant white shades. A value closer to 0 creates a natural image and a value closer to 10 enhances brightness.
Degamma	Adjusts the colour performance of the display from 0 to 3.
Colour	Adjusts the Red, Green, Blue, Cyan, Magenta and Yellow colours on the projector from 0 to 100 to provide custom colour and luminance output. Each colour has a default value of 100. Adjustments to the colour settings register to the User mode.
Auto Signal Detect	Enables or disables signal searching of input connectors. • Select **On** to have the projector continuously switch inputs until it finds an active video source. • Select **Off** to maintain signal detection in one input.
Lamp Reminder	Select **On** to show or **Off** to hide the lamp replacement reminder when it appears. This reminder appears 100 hours before the recommended lamp replacement.

Submenu setting	Description
Lamp Mode	Adjusts lamp brightness to **Standard** or **Economy**. **Standard** displays a high-quality, bright image. **Economy** increases the lamp life by decreasing the brightness of the image.
Auto Power Off	Sets the length of the auto power off countdown timer between 1 and 240 minutes. The timer begins to count down when the projector no longer receives a video signal. The timer finishes when the projector enters Standby mode. Select **0** to turn off the timer.
Zoom	Adjusts the zoom to the centre of the image in or out from 0 to 30.
H-position (RGB input)	Moves the horizontal position of the source video left or right from 0 to 100 (relative to the projected image). **NOTE** This is useful in situations where the source video is cut off.
V-position (RGB input)	Moves the vertical position of the source video up or down from -5 to 5 (relative to the projected image). **NOTE** This is useful in situations where the source video is cut off.
Aspect Ratio	Adjusts the image output to **Fill Screen**, **Match Input** or **16:9**. • **Fill Screen** produces an image that fills the entire screen by stretching and scaling. • **Match Input** matches the projector's aspect ratio to the input's aspect ratio. As a result, black bands might appear along the top and bottom edges of the screen horizontally (letterbox format) or along the left and right edges of the screen vertically (pillarbox format). • **16:9** changes the output to 16:9 by letterboxing the image, which is recommended for use with HDTV and DVDs enhanced for wide-screen television. **NOTE** See *Video format* on page 73 for descriptions of each mode.
Startup Screen	Sets the type of startup screen to **SMART** or **User**. The **SMART** screen is the default SMART logo on a blue background. The **User** screen uses the saved picture from the Capture User Startup Screen function.
Video Mute	Turns the video mute setting on or off. Select **On** to hide the display and **Off** to show it again.

Submenu setting	Description
High Speed Fan	Adjusts the speed of the projector's fan. Select **High** or **Normal**. **NOTE** Use the High setting when the projector's temperature is high or the altitude is above 1800m (6000').
Projector Mode	Adjusts the projection mode to **Front**, **Ceiling**, **Rear** or **Rear Ceiling**. **IMPORTANT** SMART recommends that you never change this setting from the **Ceiling** projection mode.
Source	Adjusts the input source to **VGA-1**, **VGA-2**, **Composite**, **S-Video** or **HDMI**.
VGA1	Assigns an alternative name to your VGA 1 input, which appears when you select the VGA 1 input.
VGA2	Assigns an alternative name to your VGA 2 input, which appears when you select the VGA 2 input.
Composite	Assigns an alternative name to your Composite video input, which appears when you select the Composite video input.
HDMI	Assigns an alternative name to your HDMI input, which appears when you select the HDMI input.
Emergency Alert	Turns the on-screen alert broadcast message on or off. When enabled, this message displays over the current projected image.
Alarm Message / Alert Message	Displays an on-screen emergency notification message (maximum 60 characters).

Network settings

This menu allows you to use or not use Dynamic Host Control Protocol (DHCP) and to set the network-related addresses and names when DHCP isn't used.

Submenu setting	Description
DHCP	Determines whether the projector's IP address and other network settings are dynamically assigned by a DHCP server or are manually set. • **On** allows the network's DHCP server to assign a dynamic IP address to the projector. • **Off** allows you to manually set the projector's IP address and other network settings.
IP Address	Displays or allows you to set the projector's IP address in values between 0.0.0.0 and 255.255.255.255.
Subnet Mask	Displays or allows you to set the projector's subnet mask number in values between 0.0.0.0 and 255.255.255.255.

Submenu setting	Description
Gateway	Displays or allows you to set the projector's default network gateway in values between 0.0.0.0 and 255.255.255.255.
DNS	Displays or allows you to set the projector's IP address for your network's primary domain name server in values between 0.0.0.0 and 255.255.255.255.
Group Name	Displays or allows you to set the projector's workgroup name (maximum 12 characters).
Projector Name	Displays or allows you to set the projector's name (maximum 12 characters).
Location	Displays or allows you to set the projector's location (maximum 16 characters).
Contact	Displays or allows you to set the contact name or number for projector support (maximum 16 characters).
SNMP	Turns the Simple Network Management Protocol (SNMP) agent on or off.
Read-Only Community	Sets a password that is required for each SNMP get request to the device. **NOTE** The default for Read-Only Community is public.
Read/Write Community	Sets a password that is required for each SNMP set request to the device. **NOTE** The default for Read/Write Community is private.
TRAP Destination Address	Displays or allows you to set the IP address of the network's SNMP TRAP manager in values between 0.0.0.0 and 255.255.255.255. The TRAP destination address is the IP address of the computer assigned to handle unsolicited data generated by SNMP TRAP events generated by the projector, such as power state changes, projector failure modes, a lamp needing to be replaced or other issues.

Email alerts

This menu enables you to enter your preferred address for receiving email alerts and to adjust related settings.

Submenu setting	Description
Email Alert	Select **Enable** to turn on or **Disable** to turn off the email alert function.
To	Displays or allows you to set the email address of the email alert recipient.

Submenu setting	Description
CC	Displays or allows you to set the email address of the email alert “copy to” recipient.
From	Displays or allows you to set the email address of the user who sends the email alert.
Subject	Displays or allows you to set the email alert subject.
Outgoing SMTP server	Displays or allows you to set the Simple Mail Transfer Protocol (SMTP) server that you use on your network.
Username	Displays or allows you to set the SMTP server user name.
Password	Displays or allows you to set the SMTP server password.
Alert Condition	Sends email alerts whenever **Lamp Warning**, **Low Lamp Life**, **Temperature Warning** and **Fan Lock** conditions occur. Select the settings that you want and then click **Submit**. **NOTE** The projector sends an alert email (SMART Alert) to your email address. Click **Email Alert Test** to confirm that your email address and SMTP server settings are correct by sending a test email (SMART Alert-Test Mail). If the settings aren’t correct, the email alert messages aren’t sent or received successfully and warnings and notification message aren’t available to advise of this state.

Password settings

This menu provides a security function that allows an administrator to manage projector use and enable the administrator password function.

Submenu setting	Description
Password	When the password function is enabled, the administrator password is required to access Web Management. Select **Disable** to allow remote web management of the projector without requiring a password.

NOTES

- The first time you enable the password settings, the default password value is four numbers, for example, 1234.
- The maximum allowable password length is four numbers or letters.
- If you forget the projector password, refer to *Accessing the service menu* on page 39 to set the projector setting to factory defaults.

Simple Network Management Protocol (SNMP)

Your projector supports a list of SNMP commands as described in the management information base (MIB) file. You can download this file by browsing to smarttech.com/software and clicking the MIB file's link in the *Hardware* section for the SMART UF70 projector.

The SNMP agent in your projector supports SNMP version 1 or 2. Upload the MIB file to your SNMP management system application and then use it as described in your application's user guide.

Appendix B

Remotely managing your system through an RS-232 serial interface

Serial interface settings 50
Projector programming commands 51
- Projector power state controls 51
  - Command/response definitions 51
  - Field definitions 52
- Source Application Selection 52
  - Command/response definitions 52
  - Field definitions 53
- Video control 54
  - Command/response definitions 54
  - Field definitions 56
- Audio control 59
  - Command/response definitions 59
  - Field definitions 60
- Network information 61
  - Command/response definitions 61
  - Field definitions 62
- System information 62
  - Command/response definitions 62
  - Field definitions 65
- Service Information 69
  - Command/response definitions 69
  - Field definitions 70
- Unknown command 72

This appendix includes detailed instructions on how to set up your computer or room control system to remotely manage your SMART Board M600i6 interactive whiteboard system settings through an RS-232 serial interface.

By connecting a computer or room control system to the interactive whiteboard, you can select video inputs, start up or shut down your interactive whiteboard system and request information such as projector lamp use, current settings and network addresses.

NOTE

On projectors with the RS-232 connector labeled **Control 9v** (rather than **Control**), pin 1 functions as a +9V DC power source only for use with older model ECPs such as the ones shipped with SMART UF55 projectors.

Serial interface settings

The serial interface of the projector acts as a Data Communications Equipment (DCE) device and its settings can't be configured. You must configure your computer's serial communication program (such as Microsoft® HyperTerminal) or your room control system's serial communication settings with the following values:

Setting	Value
Data Rate	19.2 kbps
Data Bits	8
Parity	None
Stop Bits	1
Flow Control	None

NOTES

- Asynchronous mode is disabled by default in the projector.
- All commands should be in ASCII format. Terminate all commands with a carriage return.
- All responses from the projector are terminated with a command prompt. Wait until you receive the command prompt indicating that the system is ready for another command before you proceed.
- The room control feature of the projector is always on.

To configure your computer's serial interface

1. Turn on your computer and then start your serial communications program or terminal emulation program.
2. Connect your computer to the serial connection cable that you previously connected to the control panel.

3. Configure your serial interface settings using the values from the table above and then press ENTER.

   An “invalid cmd= ? for help” message appears, and the “>” character appears as a command prompt on the following line.

   IMPORTANT

   If no message appears or if an error message appears, your serial interface configuration is not correct. Repeat step 3.

4. Type commands to configure your settings.

   NOTES

   - To see a list of commands available in the current operating mode, type **?** and then press ENTER.
   - If you’re using a terminal emulation program, turn on your program’s local echo setting to see characters as you type them.

Projector programming commands

This section documents the projector programming commands and responses.

Projector power state controls

Use these commands to determine the projector power state and related controls.

Command/response definitions

Command	Response	Responds when powered off
on	powerstate=[power state]	yes
off [off option]	powerstate=[power state]	yes
get powerstate	powerstate=[power state]	yes

Field definitions

Field	Possible values	Description
off option	now	This is an optional field. It forces the projector to shut down. Once this process starts, you can't cancel it. If "now" isn't specified, the "off" command causes a countdown to appear. To turn off the projector, you must send a second "off" command before the countdown expires; otherwise the projector, remains on at the end of the countdown. **NOTE** Consider this as another projector state. When the countdown is complete, an asynchronous response indicates that the projector has returned to the "on" state. When the projector has turned off, this command should be accepted but doesn't do anything but return the power state.
powerstate	• powering • on • cooling • confirm off • idle	The projector's current power state. Different projectors have different potential power states. These power states match the power states in the SMART UF70 and SMART UF70w projectosr.

Source Application Selection

Use these commands to switch between input sources and embedded applications. These commands also control the USB switch for these sources.

Command/response definitions

Command	Response	Responds when powered off
set input [target]	input=[current]	no
get input	input=[current]	yes
get videoinputs	videoinputs=[current]	yes
set usb1source [target]	usb1source=[current]	yes
get usb1source	usb1source=[current]	yes
set usb2source [target]	usb2source=[current]	yes
get usb2source	usb2source=[current]	yes

Field definitions

Field	Possible values	Description
current input	• VGA1 • Composite • HDMI1 • None	A text list of available video source inputs. **None** is a non-selectable input and is returned in response to a “get input” command when the projector is turned off.
target input	• = VGA1 • = Composite • = HDMI1 • = None • = Next	A text list of possible inputs. Selecting **Next** causes the projector to move to the next item in the list and return a response equivalent to a user-specified input.
current videoinputs	VGA1, Composite, HDMI1, etc.	A comma-separated list of available projector inputs. The strings returned in this command must match the strings used for the input selection from the on-screen display (OSD). VGA1 and HDMI1 are local at the projector. VGA2 and HDMI2 are at the UCP. The maximum could be 10 inputs in the current list (maximum of 14 is reserved).
current usb1source	• VGA1 • HDMI1 • Disabled	Current value that the USB1 switch is enabled for.
target usb1source	• = VGA1 • = HDMI1 • = Disabled	Value to set the USB1-switch-enabled source to. If this value is the same as the USB2 source, the USB1 source is used and the USB2 source is ignored.
current usb2source	• VGA1 • HDMI1 • Disabled	Current value of the USB2 switch.
target usb2source	• = VGA1 • = HDMI1 • = Disabled	Value to set the USB2 switch enabled source to. If this value is the same as the USB2 source, the USB1 source is used and the USB2 source is ignored.

EXAMPLE

```
> set input=vga1

input = vga1

> set input=next

input = composite
```

```
> get videoinputs

videoinputs = vga1, composite, hdmi1

> get usb1source

usb1source = vga1

> get usb2source

usb2source = hdmi1

> set usb2source=hdmi1

usb2source = hdmi1

>
```

Video control

Use these commands to change your projector's video output controls. The range of values used for these commands should match the range displayed in the on-screen display (OSD). The firmware must handle videofreeze and videomute states correctly. A change should be made to ensure that videofreeze and videomute are mutually exclusive.

Command/response definitions

Command	Response	Responds when powered off
set displaymode [target]	displaymode=[current]	no
get displaymode	displaymode=[current]	no
set brightness [target]	brightness=[current]	no
get brightness	brightness=[current]	no
set contrast [target]	contrast=[current]	no
get contrast	contrast=[current]	no
set frequency [target]	frequency=[current]	no
get frequency	frequency=[current]	no
set tracking [target]	tracking=[current]	no
get tracking	tracking=[current]	no
set saturation [target]	saturation=[current]	no
get saturation	saturation=[current]	no
set tint [target]	tint=[current]	no
get tint	tint=[current]	no

set sharpness [target]	sharpness=[current]	no
get sharpness	sharpness=[current]	no
set hposition [target]	hposition=[current]	no
get hposition	hposition=[current]	no
set vposition [target]	vposition=[current]	no
get vposition	vposition=[current]	no
set whitepeaking [target]	whitepeaking=[current]	no
get whitepeaking	whitepeaking=[current]	no
set degamma [target]	degamma=[current]	no
get degamma	degamma=[current]	no
set red [target]	red=[current]	no
get red	red=[current]	no
set green [target]	green=[current]	no
get green	green=[current]	no
set blue [target]	blue=[current]	no
get blue	blue=[current]	no
set cyan [target]	cyan=[current]	no
get cyan	cyan=[current]	no
set magenta [target]	magenta=[current]	no
get magenta	magenta=[current]	no
set yellow [target]	yellow=[current]	no
get yellow	yellow=[current]	no
set videofreeze [target]	videofreeze=[current]	no
get videofreeze	videofreeze=[current]	no
set displayhide	displayhide= [target]	no
get displayhide	displayhide= [target]	no

Field definitions

Field	Possible values	Description
target displaymode	• = SMART Presentation • = Bright room • = Dark room • = sRGB • = User	The ranges must match the OSD ranges.
current displaymode	• SMART Presentation • Bright room • Dark room • sRGB • User	The ranges must match the OSD ranges.
target brightness	• + val • – val • = 0 to 100	Use + or – to change the brightness incrementally. Enter a number within the range to set the brightness to a specific level.
current brightness	Range: 0 to 100	The device's current brightness.
target contrast	• + val • – val • = 0 to 100	Use + or – to change the contrast incrementally. Enter a number within the range to set the contrast to a specific level.
current contrast	Range: 0 to 100	The device's current contrast.
target frequency	• + val • – val • = -5 to +5	The ranges must match the OSD ranges.
current frequency	Range: -5 to +5	The ranges must match the OSD ranges.
target tracking	• + val • – val • = 0 to 31	The ranges must match the OSD ranges.
current tracking	Range: 0 to 31	The ranges must match the OSD ranges.
target saturation	• + val • – val • = 0 to 100	The ranges must match the OSD ranges.
current saturation	Range: 0 to 100	The ranges must match the OSD ranges.
target tint	• + val • – val • = 0 to 100	The ranges must match the OSD ranges.
current tint	Range: 0 to 100	The ranges must match the OSD ranges.

Field	Possible values	Description
target sharpness	• + val • – val • = 0 to 31	The ranges must match the OSD ranges.
current sharpness	Range: 0 to 31	The ranges must match the OSD ranges.
target hposition	• + val • – val • = 0 to 100	The ranges must match the OSD ranges.
current hposition	Range: 0 to 100	The ranges must match the OSD ranges.
target vposition	• + val • – val • = -5 to +5	The ranges must match the OSD ranges. Values depend upon the source.
current vposition	Range: -5 to +5	The ranges must match the OSD ranges.
target whitepeaking	• + val • – val • = 0 to 10	The ranges must match the OSD ranges.
current whitepeaking	Range: 0 to 10	The ranges must match the OSD ranges.
target degamma	• + val • – val • = 0 to 3	The ranges must match the OSD ranges.
current degamma	Range: 0 to 3	The ranges must match the OSD ranges.
target red	• + val • – val • = 0 to 100	The ranges must match the OSD ranges.
current red	Range: 0 to 100	The ranges must match the OSD ranges.
target green	• + val • – val • = 0 to 100	The ranges must match the OSD ranges.
current green	Range: 0 to 100	The ranges must match the OSD ranges.
target blue	• + val • – val • = 0 to 100	The ranges must match the OSD ranges.
current blue	Range: 0 to 100	The ranges must match the OSD ranges.
target cyan	• + val • – val • = 0 to 100	The ranges must match the OSD ranges.
current cyan	Range: 0 to 100	The ranges must match the OSD ranges.

Field	Possible values	Description
target magenta	• + val • – val • = 0 to 100	The ranges must match the OSD ranges.
current magenta	Range: 0 to 100	The ranges must match the OSD ranges.
target yellow	• + val • – val • = 0 to 100	The ranges must match the OSD ranges.
current yellow	Range: 0 to100	The ranges must match the OSD ranges.
target videofreeze	• = on • = off	Video freeze on/off
current videofreeze	• = on • = off	Video freeze on/off
current displayhide	• normal • frozen • muted	Matches the three states of the Hide button on the remote control.
target displayhide	• normal • frozen • muted • next	Set the mode directly or move from one state to the next sequentially.

Use the above commands to set the property to an absolute value or to adjust the current value.

EXAMPLE

```
>get brightness

brightness=55

>set brightness = 65

brightness=65

>set brightness +5

brightness=70

>set brightness -15

brightness=55

>
```

All video commands also have an optional source specification. For example, to set the brightness of a specific source, use the following command.

EXAMPLE

```
>set brightness = 65

brightness=65

>set brightness vga1 = 65

brightness vga1 = 65
```

This sets the brightness of the VGA1 source whether the projector is on this source or not.

Audio control

Use these commands to set audio output controls. The range of values used for these commands should match the range shown in the on-screen display (OSD).

Command/response definitions

Command	Response	Powered off
set volume [target]	volume=[current]	no
get volume	volume=[current]	no
set mute [target]	mute=[current]	no
get mute	mute=[current]	no
set volumecontrol [target]	volumecontrol= [current]	no
get volumecontrol	volumecontrol= [current]	no
set cc [target]	cc=[current]	no
get cc	cc=[current]	no
set sysoutputsw [target]	sysoutputsw= [current]	no
get sysoutputsw	sysoutputsw= [current]	no

Field definitions

Field	Possible values	Description
target volume	• + val • – val • = -20 to 20	Use + or – to change the volume incrementally. Enter a number within the range to set the volume to a specific level. When you modify the volume using the RS-232, the OSD's volume slider matches the slider that appears when you use another control. Note that -20 should map to 0 and 20 should map to 40.
current volume	Range: -20 to 20	The device's current volume. Note that -20 should map to 0 and 20 should map to 40.
target mute	• = on • = off	Specifies whether mute is enabled or disabled.
current mute	• = on • = off	Current state of the mute function
current volumecontrol	• = on • = off	Current state of the volume control
target volumecontrol	• = on • = off	Specifies whether volume control is enabled or disabled.
target cc	• = cc1 • = cc2 • = off	Closed captioning states
current cc	• = cc1 • = cc2 • = off	Closed captioning states
target sysoutputsw	• = line+spkr • = line • = spkr • = none	Specifies the system output switch
current sysoutputsw	• = line+spkr • = line • = spkr • = none	Current state of the system output switch

Use the above commands to set the property to an absolute value or to adjust the current value.

EXAMPLE

```
>get volume

volume=0
```

```
>set volume=-10
volume=-10
>set volume +5
volume=-5
>set volume -15
volume=-20
```

Network information

Use these commands to set your network information.

Command/response definitions

Command	Response	Powered off
get netstatus	netstatus=[current]	yes
set network	network=[current]	yes
get network	network=[current]	yes
set dhcp [target]	dhcp=[current]	yes
get dhcp	dhcp=[current]	yes
set ipaddr [target]	ipaddr=[current]	yes
get ipaddr	ipaddr=[current]	yes
set subnetmask [target]	subnetmask=[current]	yes
get subnetmask	subnetmask=[current]	yes
set gateway [target]	gateway=[current]	yes
get gateway	gateway=[current]	yes
set primarydns [target]	primarydns=[current]	yes
get primarydns	primarydns=[current]	yes
get macaddr	macaddr=[MAC address]	yes

Field definitions

Field	Possible values	Description
current netstatus	• connected • disconnected	Current status of the network interface
current network	• on • off	Current status of the network module and the VGA output
target network	• on • off	Enable/Disable network module and VGA output
current dhcp	• = on • = off	Enable/Disable for DHCP Networking
target dhcp	• on • off	Enable/Disable for DHCP Networking
current ipaddr	Range: 0.0.0.0 to 255.255.255.255	Current IP address (static or dhcp assigned)
target ipaddr	= Range: 0.0.0.0 to 255.255.255.255	Set to static IP Address
current subnetmask	Range: 0.0.0.0 to 255.255.255.255	Current subnet Mask
target subnetmask	= Range: 0.0.0.0 to 255.255.255.255	Target subnet Mask
current gateway	Range: 0.0.0.0 to 255.255.255.255	Current gateway
target gateway	= Range: 0.0.0.0 to 255.255.255.255	Target gateway
current primarydns	Range: 0.0.0.0 to 255.255.255.255	Current primary dns
target primarydns	= Range: 0.0.0.0 to 255.255.255.255	Target primary dns
MAC address	xx-xx-xx-xx-xx-xx	The device's MAC address.

System information

Use these commands to set your system information.

Command/response definitions

Command	Response	Powered off
set autosignal [target]	autosignal=[current]	no

Command	Response	Powered off
get autosignal	autosignal=[current]	no
set lampreminder [target]	lampreminder= [current]	no
get lampreminder	lampreminder= [current]	no
set highbrightness [target]	highbrightness= [current]	no
get highbrightness	highbrightness= [current]	no
set autopoweroff [target]	autopoweroff= [current]	no
get autopoweroff set zoom [target]	autopoweroff= [current]	no
set zoom [target]	zoom=[current]	no
get zoom	zoom=[current]	no
set projectorid [target]	projectorid=[current]	no
get projectorid	projectorid=[current]	no
set aspectratio [target]	aspectratio=[current]	no
get aspectratio	aspectratio=[current]	no
set projectionmode [target]	projectionmode= [current]	no
get projectionmode	projectionmode= [current]	no
set startupscreen [target]	startupscreen= [current]	no
get startupscreen	startupscreen= [current]	no
set restoredefaults	restoredefaults= [current]	yes
get lamphrs	lamphrs=[current]	yes
set lamphrs [target]	lamphrs=0	yes

Command	Response	Powered off
get syshrs	syshrs=[current]	yes
get resolution	resolution=[current]	no
get nativeaspectratio	nativeaspect=[native]	no
get fwverddp	fwverddp=[current]	yes
get fwvernet	fwvernet=[current]	yes
get fwvermpu	fwvermpu=[current]	yes
get serialnum	serialnum=[current]	yes
get fwverecp	fwverecp=[current]	yes
set language [target]	language=[current]	no
get language	language=[current]	no
set groupname [target]	groupname=[current]	no
get groupname	groupname=[current]	no
set projectorname [target]	projectorname= [current]	no
get projectorname	projectorname= [current]	no
set locationinfo [target]	locationinfo=[current]	no
get locationinfo	locationinfo=[current]	no
set contactinfo [target]	contactinfo=[current]	no
get contactinfo	contactinfo=[current]	no
get modelnum	modelnum=UF70, or modelnum=UF70w	no Returns the actual model of the projector
set videomute [target]	videomute=[current]	no
get videomute	videomute=[current]	no
set vgaoutnetenable [target]	vgaoutnetenable= [current]	yes
get vgaoutnetenable	vgaoutnetenable= [current]	yes

Command	Response	Powered off
set emergencyalertmsg [target]	emergencyalertmsg= [current]	no
get emergencyalertmsg	emergencyalertmsg= [current]	no
set emergencyalert [target]	emergencyalert= [current]	no
get emergencyalert	emergencyalert= [current]	no
get signaldetected	signaldetected= [current]	yes The response varies depending on the power mode.

Field definitions

Field	Possible values	Description
target autosignal	• = on • = off	The ranges must match the OSD settings.
current autosignal	• on • off	The ranges must match the OSD settings.
target lampreminder	• = on • = off	The ranges must match the OSD settings.
current lampreminder	• on • off	The ranges must match the OSD settings.
target highbrightness	• = on • = off	The ranges must match the OSD settings.
current highbrightness	• on • off	The ranges must match the OSD settings.
target autopoweroff	• + val • – val • = 0 to 240	The ranges must match the OSD ranges.
current autopoweroff	• + val • – val • = 0 to 240	The ranges must match the OSD ranges.
target zoom	• + val • – val • = 0 to 30	The ranges must match the OSD ranges.

Field	Possible values	Description
current zoom	• = 0 to 30	The ranges must match the OSD ranges.
target projectorid	• + val • – val • = 0 to 999	The ranges must match the OSD ranges.
current projectorid	• = 0 to 999	The ranges must match the OSD ranges.
target aspectratio	• = fill • = match • = 16:9	The ranges must match the OSD ranges. **Fill:** Regardless of the input, the image is stretched to match the DMD device. For example, a 16:9 image appears as a 4:3 image on an XGA projector and as a 16:10 image on a WXGA projector. **Match:** The signal is scaled so that the input aspect ratio is maintained. For example, a 4:3 image appears as a 4:3 image on screen. **16:9** The signal is scaled and stretched to produce a 16:9 image.
current aspectratio	• fill • match • 16:9	The ranges must match the OSD settings.
target projectionmode	• = front • = ceiling • = rear • = rear ceiling	The ranges must match the OSD settings.
current projectionmode	• = front • = ceiling • = rear • = rear ceiling	The ranges must match the OSD settings.
target startupscreen	• = smart • = usercapture • = preview	The ranges must match the OSD settings.
current startupscreen	• = smart • = usercapture • = preview	The ranges must match the OSD settings.

Field	Possible values	Description
current reset	• done	Sent once you reset the projector.
current lamphrs	• 0 to 5000	Current lamp hour usage
target lamphrs	0	Clear the current lamp hour usage. The only valid value is 0.
current resolution	• 800x600 • 1024x768 • … • no signal	Current resolution of the input. If no signal is detected, “resolution=no signal” appears.
native aspect ratio	4:3 for SMART UF70, 16:10 for SMART UF70w	Native aspect ratio. DLP resolution of the projector. Returns the actual native aspect ratio of the projector.
current fwverddp	x.x.x.x	Firmware version
current fwvernet	x.x.x.x	Network processor version
current fwvermpu	x.x.x.x	MPU version
current prjserialnum	xxxxxxxxxxxxx	Projector serial number
current fwverecp	x.x.x.x	ECP version, if present

Field	Possible values	Description
current language	• Arabic • Chinese (Simplified) • Chinese (Traditional) • Czech • Danish • Dutch • English • Finnish • French • German • Greek Letters • Hindi • Italian • Japanese • Korean • Norwegian (Norsk) • Polish • Portuguese (Brazil) • Portuguese (Portugal) • Russian • Spanish • Swedish	Must match the OSD setting
target language	= above	Must match the OSD setting
target groupname	= user string	
current groupname	user string	
target projectorname	= user string	
current projectorname	user string	
target locationinfo	= user string	
current locationinfo	user string	
target contactinfo	= user string	
current contactinfo	user string	
current modelnum	user string	Must match the OSD setting

Field	Possible values	Description
current videomute	• on • off	Must match the OSD setting.
target videomute	• = on • = off	Must match the OSD setting.
current vgaoutnetenable	• on • off	Status of VGA Out Enable and Network Enable
target vgaoutnetenable	• = on • = off	Value for VGA Out and Network Enable
current emergencyalertmsg	User string	Emergency Alert message
target emergencyalertmsg	= User string	Set the Emergency Alert message
current emergencyalert	• on • off	To display the alert message, set this value to “on.”
target emergencyalertmsg	• = on • = off	If the message is being displayed, “on” is returned.
current signaldetected	• true • false	If a signal is detected, “true” is returned.
Command List	....	A list of commands appears. This list doesn’t include service information commands.

Service Information

These commands are used in servicing and manufacturing the projector. They are hidden from the user during normal operation.

Command/response definitions

Command	Response	Powered off
get displayhour	displayhour=[current]	no
set testpattern [target]	testpattern=[current]	no
set colorwheelidx [target]	colorwheelidx= [current]	no
get colorwheelidx	colorwheelidx= [current]	no
get failurelog	failurelog=[current]	yes

Command	Response	Powered off
get error#	error#=[current]	yes
set factoryreset [target]	factoryreset=[current]	yes
set highspeedfan [target]	highspeedfan= [current]	no
get highspeedfan	highspeedfan= [current]	no
set statereporting [target]	statereporting= [current]	yes
get statereporting	statereporting= [current]	yes
get poweroverride	poweroverride= [current]	no
set poweroverride [target]	poweroverride= [current]	no

Field definitions

Field	Possible Values	Description
current displayhour	0 to 20000	Current display hours.
target testpattern	= 1 to 4	Set the test pattern to pattern number (1 to 4). If there's only one test pattern, call it test pattern 1.
current testpattern	• 1: Grid • 2: Red • 3: Green • 4: Blue • 5: Grey • 6: Black	Test pattern being displayed. The built-in test pattern can be changed.
target colorwheelidx	= ???	The ranges must match the OSD ranges.
current colorwheelidx	???	The ranges must match the OSD ranges.

Field	Possible Values	Description
current failurelog	• normal • overtemp • fanlock • fanDMD • fanblower • fansystem • lamperror • colorwheelbreak • lampignite • lampoverheat • lampdriver • lampoverhours	Projector's error state. The modes are projector dependent.
Current error#	Provide the details of the specific error. “#” is the number recorded in the log. It ranges from 1 to 5. 1 indicates the most recent error and 5 indicates the oldest error.	The details include the failure reason, system hours, lamp hours, sensor temperature and lamp voltage. Example: error1=fansystem, syshrs:1000, lamphrs=1000, temp=60,volt=120. error2=lampoverheat, syshrs:3000, lamphrs=2900, temp=150,volt=120.
target factoryreset	• = true • = false	If set to “true,” perform a factory reset. Otherwise, do nothing.
current factoryreset	• = true • = false	Set to “true” only if a factory reset is about to occur.
target highspeedfan	• = high • = normal	Must match the OSD settings.
current highspeedfan	• high • normal	Must match the OSD settings.
current statereporting	• on • off	Current state reporting value
target statereporting	• = on • = off	Target state reporting value

Field	Possible Values	Description
current poweroverride	• on • off	A power override forces the projector to remain on when the command is received. This command isn't persistent and isn't stored to non-volatile memory (cleared on power cycle). When this mode is enabled, the power button on the remote control and the ECP, if present, must not turn off the projector. This command must also be added to the service menu so the user can disable it from the OSD.
target poweroverride	• = on • = off	Sets the power override

Unknown command

If an unknown command is received, the projector sends the following response to the user (there is a space between "invalid" and "cmd").

```
>dummycommand 2134

invalid cmd=dummycommand 2134
```

Appendix C
Integrating other devices

Video format 73
Native video format 73
Video format compatibility 73
SMART UF70 projector 74
SMART UF70w projector 75
HD and SD signal format compatibility 76
SMART UF70 projector 76
SMART UF70w projector 76
Video system signal compatibility 77
SMART UF70 projector 77
SMART UF70w projector 77
Connecting peripheral sources and outputs 77

This appendix provides information on integrating your SMART Board M600i6 interactive whiteboard system with peripheral devices.

Video format

Your projector has a native video format and various video format compatibility modes. You can change image appearances for certain formats and compatibilities.

Native video format

The following table lists the native VESA RGB video formats for the projector.

Projector	Resolution	Mode	Aspect ratio	Refresh rate (Hz)	Horizontal frequency (kHz)	Pixel clock (MHz)
SMART UF70	1024 × 768	XGA	4:3	60	48	63.5

Video format compatibility

The following tables list the projectors' compatible VESA RGB video formats by resolution, which the projector adjusts automatically when you use the aspect ratio commands described in *Adjusting projector settings* on page 12.

SMART UF70 projector

Resolution	Mode	Aspect ratio	Refresh rate (Hz)	Match Input appearance
720 × 400	720×400_85	1.8:1	85.039	Letterbox
640 × 480	VGA 60	4:3	59.94	Full screen
640 × 480	VGA 72	4:3	72.809	Full screen
640 × 480	VGA 75	4:3	75	Full screen
640 × 480	VGA 85	4:3	85.008	Full screen
800 × 600	SVGA 56	4:3	56.25	Full screen
800 × 600	SVGA 60	4:3	60.317	Full screen
800 × 600	SVGA 72	4:3	72.188	Full screen
800 × 600	SVGA 75	4:3	75	Full screen
800 × 600	SVGA 85	4:3	85.061	Full screen
832 × 624	MAC 16"	4:3	74.55	Full screen
1024 × 768	XGA 60	4:3	60.004	Full screen
1024 × 768	XGA 70	4:3	70.069	Full screen
1024 × 768	XGA 75	4:3	75.029	Full screen
1024 × 768	XGA 85	4:3	84.997	Full screen
1024 × 768	MAC 19"	4:3	74.7	Full screen
1152 × 864	SXGA1 75	4:3	75	Full screen
1280 × 720	HD 720	16:9	60	Letterbox
1280 × 768	SXGA1 75	1.67:1	60	Letterbox
1280 × 800	WXGA	16:10	60	Letterbox
1280 × 960	Quad VGA 60	4:3	60	Full screen
1280 × 960	Quad VGA 85	4:3	85.002	Full screen
1280 × 1024	SXGA3 60	5:4	60.02	Letterbox
1280 × 1024	SXGA3 75	5:4	75.025	Letterbox
1280 × 1024	SXGA3 85	5:4	85.024	Letterbox
1360 × 765	1.04M9	16:9	59.799	Letterbox
1600 × 900	1.44M9	16:9	59.946	Letterbox
1600 × 1200	UXGA	4:3	60	Full screen
1680 × 1050	1680x1050 50	16:10	49.974	Letterbox
1680 × 1050	1680x1050 50	16:10	59.954	Letterbox
1920 × 1080	HD 1080	16:9	60	Letterbox

SMART UF70w projector

Resolution	Mode	Aspect ratio	Refresh rate (Hz)	Match Input appearance (16:10 aspect ratio mode)	Match Input appearance (16:9 aspect ratio mode)
720 × 400	720×400_85	9:5	85.039	Letterbox	Letterbox
640 × 480	VGA 60	4:3	59.94	Pillarbox	Pillarbox
800 × 600	VGA 72	4:3	72.809	Pillarbox	Pillarbox
800 × 600	VGA 75	4:3	75	Pillarbox	Pillarbox
800 × 600	VGA 85	4:3	85.008	Pillarbox	Pillarbox
800 × 600	SVGA 56	4:3	56.25	Pillarbox	Pillarbox
800 × 600	SVGA 60	4:3	60.317	Pillarbox	Pillarbox
800 × 600	SVGA 72	4:3	72.188	Pillarbox	Pillarbox
800 × 600	SVGA 75	4:3	75	Pillarbox	Pillarbox
800 × 600	SVGA 85	4:3	85.061	Pillarbox	Pillarbox
832 × 624	MAC 16"	4:3	74.55	Pillarbox	Pillarbox
1024 × 768	XGA 60	4:3	60.004	Pillarbox	Pillarbox
1024 × 768	XGA 70	4:3	70.069	Pillarbox	Pillarbox
1024 × 768	XGA 75	4:3	75.029	Pillarbox	Pillarbox
1024 × 768	XGA 85	4:3	84.997	Pillarbox	Pillarbox
1024 × 768	MAC 19"	4:3	74.7	Pillarbox	Pillarbox
1152 × 864	SXGA 75	4:3	75	Pillarbox	Pillarbox
1280 × 768	WXGA 60	1.67:1	60	Letterbox	Pillarbox
1280 × 960	Quad VGA 60	4:3	60	Pillarbox	Pillarbox
1280 × 960	Quad VGA 85	4:3	85.002	Pillarbox	Pillarbox
1280 × 960	SXGA3 60	5:4	60.02	Pillarbox	Pillarbox
1280 × 1024	SXGA3 75	5:4	75.025	Pillarbox	Pillarbox
1600 × 1200	SXGA+	4:3	59.978	Pillarbox	Pillarbox
1600 × 1200	UXGA_60	4:3	60	Pillarbox	Pillarbox

HD and SD signal format compatibility

The following tables list the projectors' high definition (HD) and standard definition (SD) format signal compatibility, which the projector adjusts automatically when you use the aspect ratio commands described in *Adjusting projector settings* on page 12.

SMART UF70 projector

Signal format	Aspect ratio	Horizontal frequency (kHz)	Vertical frequency (Hz)	Match Input appearance
480i (DVD player) (640 × 480)	4:3	15.73	59.94	Full screen
567i (DVD player) (720 × 576)	5:4	15.63	50	Letterbox
720p	16:9	44.96	59.94	Letterbox
720p	16:9	35	50	Letterbox
1080i	16:9	33.7	59.94	Letterbox
1080i	16:9	28.1	50	Letterbox

SMART UF70w projector

Signal format	Aspect ratio	Horizontal frequency (kHz)	Vertical frequency (Hz)	Match Input appearance (16:10 aspect ratio mode)	Match Input appearance (16:9 aspect ratio mode)
480i (525i)	4:3	15.73	59.94	Pillarbox	Pillarbox
480p (525p)	4:3	31.47	59.94	Pillarbox	Pillarbox
576i (625i)	5:4	15.63	50	Pillarbox	Pillarbox
576p (625p)	5:4	31.25	50	Pillarbox	Pillarbox
720p (750p)	16:9	45	59.94	Letterbox	Full screen
720p (750p)	16:9	37.5	50	Letterbox	Full screen
1080i (1125i)	16:9	33.75	59.94	Letterbox	Full screen
1080i (1125i)	16:9	28.13	50	Letterbox	Full screen
1080p (1125p)	16:9	67.5	59.94	Letterbox	Full screen
1080p (1125p)	16:9	56.25	50	Letterbox	Full screen

NOTE

Your projector is HD-ready. Its native resolution supports a pixel-perfect display of 720p source content. However, because the projector compresses 1080p source content to fit its native resolution, it doesn't support a pixel-perfect display of 1080p source content.

Video system signal compatibility

The following tables list the projectors' video system signal compatibility, particularly for signals delivered over S-Video and Composite video connectors, which the projector adjusts automatically when you use the aspect ratio commands described in *Adjusting projector settings* on page 12.

NOTE

The 16:9 command delivers all video modes with black bands along the top and bottom edges of the screen. The Match Input command might deliver video modes with black bands along the top and bottom edges of the screen, depending on the input resolution.

SMART UF70 projector

Video mode	Aspect ratio	Horizontal frequency (kHz)	Vertical frequency (Hz)	Colour signal (MHz)
NTSC	4:3	15.73	29.96	3.58
PAL	4:3	15.62	25	4.43
SECAM	4:3	15.62	25	4.25 (f_{ob}) 4.06 (f_{or})

SMART UF70w projector

Video mode	Aspect ratio	Horizontal frequency (kHz)	Vertical frequency (Hz)	Colour signal (MHz)
NTSC	4:3	15.73	59.94	3.58
PAL	4:3	15.63	50	4.43
SECAM	4:3	15.63	50	4.25 and 4.41
PAL-M	4:3	15.73	59.94	3.58
PAL-N	4:3	15.63	50	3.58
PAL-60	4:3	15.73	59.94	4.43
NTSC 4.43	4:3	15.73	59.94	4.43

Connecting peripheral sources and outputs

Follow these instructions if you have a peripheral device to connect to your interactive whiteboard system, such as a DVD/Blu-ray player.

NOTE

Measure the distance between the projector and the peripheral device that you want to connect. Make sure that each cable is long enough, has plenty of slack and can be placed safely in your room without presenting a trip hazard.

To connect a peripheral source or output to your projector

1. Connect your peripheral device's input cables to the projector.
2. Switch input sources to the peripheral device by pressing the **Input** button on the remote control.

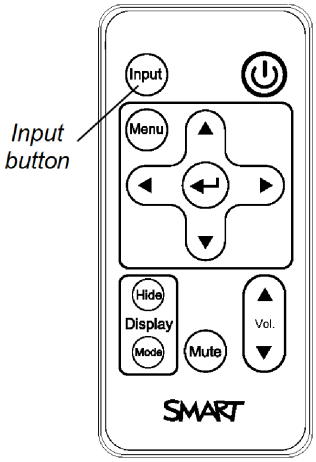

Appendix D
Remote control code definitions

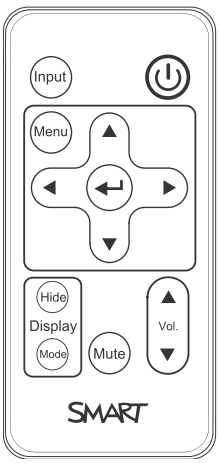

IR signal format: NEC1

Key	Repeat format	Vendor code		Key code	
		Byte 1	Byte 2	Byte 3	Byte 4
Input	F1	8B	CA	14	EB
Power (⏻)	F1	8B	CA	12	ED
Menu	F1	8B	CA	1B	E4
Up (▲)	F1	8B	CA	40	BF
Left (◀)	F1	8B	CA	42	BD
Enter (↵)	F1	8B	CA	13	EC
Right (▶)	F1	8B	CA	43	BC
Down (▼)	F1	8B	CA	41	BE
Hide	F1	8B	CA	15	EA
Volume up (▲)	F1	8B	CA	44	BB
Mode	F1	8B	CA	45	BA
Mute	F1	8B	CA	11	EE
Volume down (▼)	F1	8B	CA	46	B9

Appendix E
Hardware environmental compliance

SMART Technologies supports global efforts to ensure that electronic equipment is manufactured, sold and disposed of in a safe and environmentally friendly manner.

Waste Electrical and Electronic Equipment and Battery regulations (WEEE and Battery Directives)

Electrical and electronic equipment and batteries contain substances that can be harmful to the environment and to human health. The crossed-out wheeled bin symbol indicates that products should be disposed of in the appropriate recycling stream and not as regular waste.

Batteries

Remote contains CR2025 battery. Recycle or dispose of batteries properly.

Perchlorate material

Contains perchlorate material. Special handling may apply. See dtsc.ca.gov/hazardouswaste/perchlorate.

Mercury

The lamp in this product contains mercury and must be recycled or disposed in accordance with local, regional and national legislation.

More information

See smarttech.com/compliance for more information.

Index

3

3.5mm audio connectors 19

A

accessories
- included 4
- optional 4

alarms 45
aspect ratios 14, 44, 73-74, 76-77
audio
- connections for 19
- controlling volume of 43
- muting 11
- resolving issues with 38

B

batteries 10, 81
Blu-ray players 77

C

cameras 77
closed captioning 43
composite video connections 45, 77
connection diagrams
- projector 19

contact person 46

D

DHCP 15, 45
display modes 11-12, 43
DNS 46
document cameras 77
dust iv
DVD players 77

E

electrostatic discharge iv
email alerts 46
emergency alerts 45
emissions iv
environmental requirements iii

F

fans 33, 45
flickering 36
focus 18

H

HD signal compatibility 76
HDMI connections 19, 45
head space clearance 6
height 6
humidity iii

I

image
- adjusting 18
- focusing 18
- resolving issues with 34

input selection 45
installation
- choosing a height 6
- choosing a location 5

interactive whiteboard
- about 2
- indicators and controls of 32
- maintaining 21
- using 20

IP address 16, 42, 45

L

lamp module
- cleaning 22
- replacing 23
- resolving issues with 34

languages 43
laptop computers
- troubleshooting issues with 37

letterboxing 73-74, 76
light sources 5
location 5, 46

M

MAC support 73-74
mercury 81
mounting template 6
mute control 11, 13, 43

N

native video formats 73
network communication 19, 38, 45

O

options 4
original packaging 40

P

passwords 15, 39, 47
pens 4
Perchlorate material 81
peripheral sources 77
pillarboxing 73-74, 76
power 19, 42, 51
projector
- about 3
- adjusting settings for 12
- adjusting the image of 18
- cleaning 22
- connection diagram for 19
- displaying the name of 46
- focusing the image of 18
- installing 5
- lights and status of 30
- locating the serial number on 30
- remotely managing 41, 49
- replacing the lamp of 23
- routing cables from 6
- securing to the boom 6
- using your remote control with 9
- video format compatibility for 73

Q

quad VGA support 73-74

R

RCA jacks 19
refresh rates 73-74
remote control
- about 4
- code definitions for 79
- installing the battery 10
- using the buttons 11

RJ45 connector 19
room control 41, 49
RS-232 serial interface 19

S

S-video connections 77
SD signal compatibility 76
serial number 30
signal loss 35
SMART Board interactive whiteboard See interactive whiteboard
SMART UF70 or UF70w projector See projector
SMTP 47
SNMP 48
sound See audio
startup screen 44
subnet mask 16, 45
SVGA support 73-74
SXGA support 73-74

T

temperatures, operating and storage iii
transportation 40
TRAP destination address 46
troubleshooting 29

U

UF70 or UF70w projector See projector
USB ports 19
UXGA support 73-74

V

VGA connections 19, 45
VGA support 73-74
video
    connections for 19
    format compatibility for 73

W

warnings ii
water and fluid resistance iii
webpage management 41
WEEE and Battery Directives 81
whiteboard See interactive whiteboard

X

XGA support 73-74

Z

zoom 44

(Undefined variable: SMARTTrade-
marks.Company_Long)

smarttech.com/support

smarttech.com/contactsupport