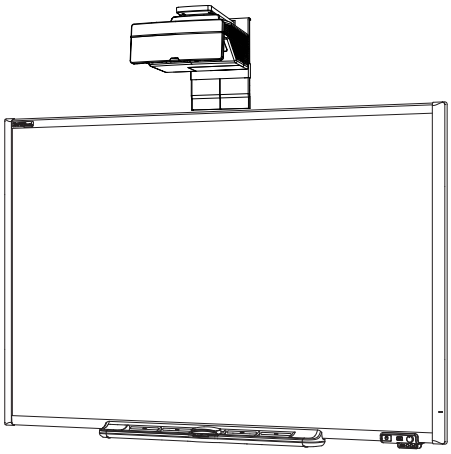

SMART Board® 685ix2
interactive whiteboard system

CONFIGURATION AND USER'S GUIDE

SMART®

CC warning

This equipment has been tested and found to comply with the limits for a Class A digital device, pursuant to Part 15 of the FCC Rules. These limits are designed to provide reasonable protection against harmful interference when the equipment is operated in a commercial environment. This equipment generates, uses and can radiate radio frequency energy and, if not installed and used in accordance with the manufacturer's instructions, may cause harmful interference to radio communications. Operation of this equipment in a residential area is likely to cause harmful interference in which case the user will be required to correct the interference at his own expense.

Trademark notice

SMART Board, SMART Notebook, SMART Meeting Pro, smarttech, the SMART logo and all SMART taglines are trademarks or registered trademarks of SMART Technologies ULC in the U.S. and/or other countries. Windows and Internet Explorer are either registered trademarks or trademarks of Microsoft Corporation in the U.S. and/or other countries. Apple, iMac, Macintosh, Mac, Mac OS and Mac OS X are trademarks of Apple Inc., registered in the U.S. and other countries. Blu-ray is a trademark of the Blu-ray Disc Association. Crestron, RoomView and RoomView Connected are either trademarks or registered trademarks of Crestron Electronics, Inc. in the United States and/or other countries. All other third-party product and company names may be trademarks of their respective owners.

Copyright notice

© 2014 SMART Technologies ULC. All rights reserved. No part of this publication may be reproduced, transmitted, transcribed, stored in a retrieval system or translated into any language in any form by any means without the prior written consent of SMART Technologies ULC. Information in this manual is subject to change without notice and does not represent a commitment on the part of SMART.

This product and/or use thereof covered by one or more of the following U.S. patents.

www.smarttech.com/patents

10/2014

Important information

Before you install and use your SMART Board interactive whiteboard system, read and understand the safety warnings and precautions in this user's guide and the included important information document. These safety warnings and precautions describe the safe and correct operation of your interactive whiteboard system and its accessories, helping you to prevent injuries and equipment damage. Ensure that your interactive whiteboard system is always being used correctly.

In this document, "interactive whiteboard system" refers to the following:

- SMART Board 600 series interactive whiteboard
- SMART UX80 projector
- Accessories and optional equipment

The projector included with your system is designed to work only with certain SMART Board interactive whiteboard models. Contact your authorized SMART reseller (smarttech.com/where) for more information.

Safety warnings, cautions and important information

Installation

WARNING

- Failure to follow the installation instructions shipped with your SMART product could result in personal injury and damage to the product.
- To reduce the risk of fire or electric shock, do not expose the SMART product to rain or moisture.
- Two people are required to mount your SMART product because it may be too heavy for one person to safely maneuver.

  When you lift your interactive whiteboard, you and your assistant should stand on either side of the screen, supporting its weight at the bottom while balancing the top with your other hands.

- When mounting the projector boom on a framed or hollow wall, attach the mounting bracket to a stud to safely support the projector's weight. If you use only drywall anchors, the drywall can fail, resulting in possible personal injury, and damage to the product which may not be covered by your warranty.
- Do not leave cables on the floor where they can be a tripping hazard. If you must run a cable over the floor, lay it in a flat, straight line and secure it to the floor with tape or a cable management strip of a contrasting color. Handle cables carefully and avoid excessive bending.

CAUTION

- Do not operate this unit immediately after moving it from a cold location to a warm location. When the unit is exposed to such a change in temperature, moisture can condense on the lens and crucial internal parts. Allow the system to stabilize to room temperature before operation to prevent possible damage to the unit.
- Do not place the unit in hot locations, such as near heating equipment. Doing so could cause a malfunction and shorten the life of the projector.
- Avoid setting up and using the SMART product in an area with excessive levels of dust, humidity and smoke.
- Do not place your SMART product in direct sunlight or near any appliance that generates a strong magnetic field.
- If you need to lean the interactive whiteboard against a wall before you mount it, make sure it remains in an upright position, resting on the pen tray brackets, which can sustain the weight of the interactive whiteboard.

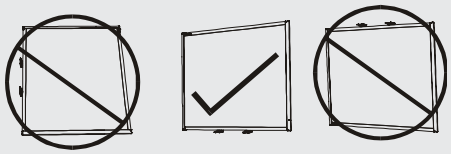

  Do not rest the interactive whiteboard on its side or on the top of the frame.
- You must connect the USB cable that came with your SMART Board interactive whiteboard to a computer that has a USB compliant interface and that bears the USB logo. In addition, the USB source computer must be compliant with CSA/UL/EN 60950 and bear the CE mark and CSA and/or UL Mark(s) for CSA/UL 60950. This is for operating safety and to avoid damage to the SMART Board interactive whiteboard.

IMPORTANT

- The SMART Board 680i6 and 685i6 interactive whiteboard system textless installation guide is also available online (smarttech.com/kb/170498).
- Make sure an electrical socket is near your SMART product and remains easily accessible during use.
- Using your SMART product near a TV or radio could cause interference to the images or sound. If this happens, move the TV or radio away from the projector.

Operation

WARNING

- If you are using an external audio system, use only the power supply included with that product. Using the wrong power supply might create a safety hazard or damage the equipment. If in doubt, refer to the specification sheet for your product to verify the power supply type.
- Do not climb (or allow children to climb) on a wall- or stand-mounted SMART Board interactive whiteboard.

  Do not climb on, hang from or suspend objects from the projector boom.

  Climbing on the interactive whiteboard or projector boom could result in personal injury or product damage.

CAUTION

- Do not block the projector's ventilation slots and openings.
- If dust or small items prevent pen tray buttons from being pressed or cause constant button contact, remove the obstructions carefully.

IMPORTANT

- If you have peripheral devices that do not use a 3.5 mm phone jack audio in/out, a DB15 VGA video input connector or an HDMI™ video connector, or that do not use a 4-pin power mini-DIN output connector to provide power to other SMART products, you may need to purchase third-party adapters.
- Keep your remote control in a safe place because there is no other way to access menu options.
- Do not disconnect cables from the ECP to connect peripheral devices because you could

disconnect controls for your interactive whiteboard.

- Disconnect the product from its power source when it's not used for a long period.

Other precautions

If you own a SMART product other than a SMART Board interactive whiteboard system, refer to the installation manual for your product for relevant warnings and maintenance instructions.

Environmental requirements

Before you install your SMART Board interactive whiteboard system, review the following environmental requirements.

Environmental requirement	Parameter
Operating temperature	• 41°F to 95°F (5°C to 35°C) from 0' to 6000' (0 m to 1800 m) • 41°F to 86°F (5°C to 30°C) from 6000' to 9800' (1800 m to 3000 m)
Storage temperature	• -4°F to 122°F (-20°C to 50°C)
Humidity	• 5% to 95% storage relative humidity, non-condensing 5% to 85% operating relative humidity, non-condensing • Humidity above 80% could cause slight wrinkling in the screen surface sheet. The wrinkles disappear when the humidity lowers.
Water and fluid resistance	• Intended for indoor use only. Doesn't meet any salt-spray or water ingress requirements. • Don't pour or spray liquids directly onto your interactive whiteboard, the projector or any of its sub-components.
Dust	• Intended for use in office and classroom environments. Not for industrial use where heavy dust and pollutants can cause malfunctions or impaired operation. Periodic cleaning is required in areas with heavier dust. See *Cleaning the projector* on page 27 for information on cleaning the SMART UX80 projector.
Electrostatic discharge (ESD)	• EN61000-4-2 severity level 4 for direct and indirect ESD • No malfunction or damage up to 8kV (both polarities) with a 330 ohm, 150 pF probe (air discharge) • Unmated connectors meet no malfunction or damage up to 4kV (both polarities) for direct (contact) discharge
Cables	• All SMART Board interactive whiteboard system cables should be shielded to prevent potential accidents and degraded video and audio quality.

Environmental requirement	Parameter
Conducted and radiated emissions	• EN55022/CISPR 22, Class A

Contents

Important information i

Safety warnings, cautions and important information i

Environmental requirements iv

Chapter 1: About your interactive whiteboard system 1

SMART Board 685ix2 interactive whiteboard system features 1

Included accessories 5

Chapter 2: Installing your interactive whiteboard system 7

Choosing a location 7

Choosing a height 8

Routing the cables 8

Installing SMART software 8

Setting up the projector image 9

Integrating your system with peripheral devices 12

Locking the pen tray to your interactive whiteboard 12

Chapter 3: Using your interactive whiteboard system 13

Using your projector 13

Using your interactive whiteboard 22

Using the Extended Control Panel (ECP) 22

Chapter 4: Maintaining your interactive whiteboard system 25

Maintaining your interactive whiteboard 25

Cleaning the projector 27

Focusing and adjusting the projector image 27

Removing and replacing the projector lamp module 27

Resetting the lamp hours 29

Replacing the remote control battery 30

Chapter 5: Troubleshooting your interactive whiteboard system 31

Before you start 32

Determining your interactive whiteboard system's status 34

Resolving interactive whiteboard issues 36

Resolving projector issues 37

Resolving audio issues 43

Resolving network communication issues 44

Resolving ECP issues 45

Accessing the service menu 45

Transporting your interactive whiteboard system 46

Appendix A: Remotely managing your system through a network interface 47

Web page management 47
Simple Network Management Protocol (SNMP) 55
Crestron® RoomView® 55

Appendix B: Remotely managing your system through an RS-232 serial interface 57

Connecting your room control system to the SMART UX80 projector 58
Projector programming commands 60

Appendix B: Adjusting projector settings 73

Appendix C: Integrating other devices 81

Video format 81
Connecting peripheral sources and outputs 84

Appendix D: Remote control code definitions 87

Appendix E: Hardware environmental compliance 89

Waste Electrical and Electronic Equipment and Battery regulations (WEEE and Battery Directives) 89
Batteries 89
Mercury 89
More information 89

Index 91

Chapter 1

About your interactive whiteboard system

SMART Board 685ix2 interactive whiteboard system features 1
SMART Board 600 series interactive whiteboard 2
SMART UX80 projector 3
Extended Control Panel (ECP) 4
Included accessories 5
Remote control 5
Pens 5
Eraser 5
Hardware mounting kit 6

Your SMART Board interactive whiteboard system combines the following components:

- SMART Board 600 series interactive whiteboard
- SMART UX80 projector
- Accessories and optional equipment

This chapter describes the features of your interactive whiteboard and provides information about product parts and accessories.

SMART Board 685ix2 interactive whiteboard system features

Your SMART Board 685ix2 interactive whiteboard system uses the WXGA (16:10) ultra-short-throw, high-offset SMART UX80 projector. It delivers high-definition, high performance interactivity that is virtually shadow-free and glare-free.

The modular and expandable hardware and software architecture of your interactive whiteboard system enables you to do everything you can do at your computer—open and close applications, meet with others, create new documents or edit existing ones, visit websites, play and manipulate video clips and more—just by touching the interactive surface.

The projector also supports video and audio connections from a variety of devices, including DVD and Blu-ray™ players, document cameras, and other high-definition sources, and can project media from these sources onto the interactive screen.

When you use SMART software with your SMART Board 685ix2 interactive whiteboard system, you can write over any application in digital ink using a pen tray pen or your finger, and then save these notes for future reference and distribution.

SMART Board 600 series interactive whiteboard

Your SMART Board 600 series interactive whiteboard has many features, including a resistive touch screen and a pen tray.

The SMART Board 600 series interactive whiteboard performs well with the SMART UX80 projector because of the projector's exceptional color performance, aspect ratio, input response and short-throw image distance.

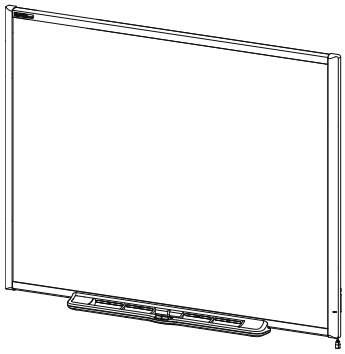

Other features of your interactive whiteboard include the following:

- A pen tray that automatically detects when you pick up a pen tray pen or the eraser
- Pen tray buttons that activate the on-screen keyboard, right-click, Orientation and Help functions
- A durable tear-resistant surface optimized for projection and easily cleaned with whiteboard cleaner
- A security cable lock feature that enables you to lock your interactive whiteboard to help safeguard it from theft

For more information about your SMART Board interactive whiteboard, see the *SMART Board 600 and D600 series interactive whiteboard installation and user's guide* (smarttech.com/kb/001414).

NOTE

Because of its wide-screen format, the SMART UX80 projector is compatible only with SMART Board 685 interactive whiteboards, and not with SMART Board 640, 660, 680, 690, D680 or D690 interactive whiteboards.

SMART UX80 projector

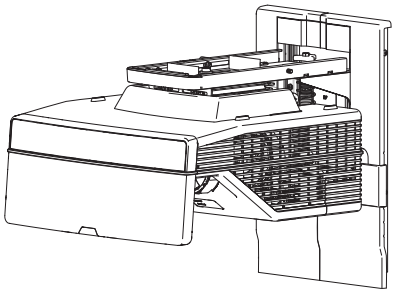

The SMART UX80 projector system includes an ultra-short-throw projector for use with SMART Board interactive whiteboards and a sturdy support system ideal for corporate and classroom environments.

The features of the projector system include the following:

- A wall-mounted, high-offset SMART UX80 projector engine that uses single chip DLP® technology by Texas Instruments™, providing BrilliantColor™ performance, High Contrast, and Gamma 2.1 correction with Bright Classroom, Dark Classroom, sRGB, User and SMART Presentation modes
- 16:10 aspect ratio
- 3600 ANSI lumens (typical)
- PAL, PAL-N, PAL-M, NTSC, NTSC 4.43, SDTV (480i/p and 576i/p), HDTV (1080p) video system compatibility
- Native 1280 × 800 resolution
- Apple Macintosh, iMac and VESA® RGB video format standard compatibility
- Remote management via network through an RJ45 cable

  OR

  Remote management via a serial RS-232 interface
- Connectivity for a second SMART UX80 projector in a dual interactive whiteboard system
- Self-protection timer for a hot re-strike of the projector lamp
- Protected cable routing through the projector housing and a cable cover that prevent tampering and clutter
- Secure mounting and installation system that includes a projector padlock loop
- An internal speaker
- Templates and instructions for positioning the system safely

Your SMART UX80 projector connection panel has the following connections:

- 3.5 mm phone jack audio input connector
- 3.5 mm phone jack audio output connector
- DB15F (DE-15F) RGB VGA video input connector

- DB9F (DE-9F) RS-232 connector
- HDMI 1 In input connector
- HDMI 2 In input connector
- Power
- USB B connector for service access
- RJ45 (8P8C modular) connector for local area network connections
- RJ45 (8P8C modular) connector for dual interactive whiteboard systems
- 7-pin mini-DIN connector
- 4-pin power-DIN 5V/2A output connector

Extended Control Panel (ECP)

Your projector system's ECP attaches to the bottom frame of your interactive whiteboard. The ECP features controls for power, source selection and volume adjustment, as well as an integrated USB hub that enables you to switch seamlessly between two connected computers.

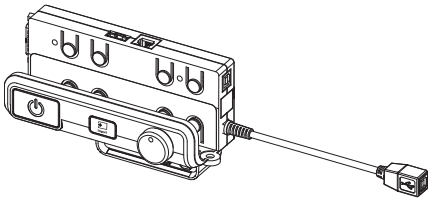

Connection receptacles for your source inputs include:

- One USB A receptacle on the front of the ECP for USB drives
- Two USB A receptacles behind the interactive whiteboard
- One captive USB B receptacle for your primary computer
- One DB15M receptacle behind the interactive whiteboard for connecting to the projector
- One USB B receptacle behind the interactive whiteboard for connecting a secondary computer
- Three RCA jacks on the front of the ECP (not connected to the projector and not used in the system)

Included accessories

The following accessories are included with your interactive whiteboard system.

Remote control

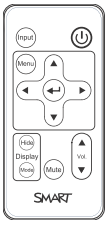

The remote control enables you to control the system and set up your projector. Use the remote control to access menu options, system information and input selection options.

Pens

The pens have rubberized grip areas and are colored to match four colors of digital ink: black, red, green and blue.

You can use dry-erase markers to replace the included pens, as long as they're a similar shape, don't scratch or mark your interactive whiteboard surface and reflect infrared light. If the substitute doesn't reflect infrared light, the pen tray sensors might not detect the presence of the pen.

NOTE

Some of SMART's older pens aren't designed to reflect infrared light and the pen tray sensors might not detect them reliably.

TIP

Wrap light-colored tape around a substitute pen to improve the reflection of infrared light and help with tool detection.

Eraser

The eraser resembles a rectangular chalkboard eraser. You can use a substitute object, as long as it has a similar shape, reflects infrared light and doesn't scratch or mark the interactive whiteboard surface.

You can add a variety of accessories to your interactive whiteboard to best meet your specific needs. Purchase these items from your authorized SMART reseller (smarttech.com/where).

For more information on accessories, go to smarttech.com/accessories.

Hardware mounting kit

You can order a hardware mounting kit from your authorized SMART reseller (smarttech.com/where). It contains an assortment of screws and wall anchors for several different wall types (see smarttech.com/kb/160505).

Chapter 2

Installing your interactive whiteboard system

Choosing a location 7
Choosing a height 8
Routing the cables 8
Installing SMART software 8
Setting up the projector image 9
- Focusing the image 9
- Aligning the image 9
- Projector connection diagram 10

Integrating your system with peripheral devices 12
Locking the pen tray to your interactive whiteboard 12

Consult the SMART Board interactive whiteboard system installation document included with your product for instructions on how to install and secure your system.

IMPORTANT

This chapter provides additional considerations and details for installing your interactive whiteboard system.

Choosing a location

Choose a location for your interactive whiteboard system that's far from bright light sources, such as windows and strong overhead lighting. Bright light sources can cause distracting shadows on your interactive whiteboard and can reduce the contrast of the projected image.

Select a wall with a flat, regular surface and sufficient clearance to accommodate your interactive whiteboard system. Install the projector and your interactive whiteboard on the same flat surface. For best presentation alignment, mount your interactive whiteboard system in a location that's central to your audience's viewing direction.

For mobile or adjustable installation options, contact your authorized SMART reseller.

Choosing a height

SMART includes a mounting template with each interactive whiteboard system. If you lose this template, contact your authorized SMART reseller. Using this template ensures that you can do the following:

- Mount the projector at a safe height for head space clearance, while maintaining enough space for airflow and installation access above the unit.
- Position the projector at the correct height above your interactive whiteboard to align the projected image with the touch screen.

Dimensions on the template recommend a distance from the floor suitable for adults of average height. You should consider the general height of your user community when you choose a location for your interactive whiteboard.

Routing the cables

When connecting cables from the SMART UX80 projector to your interactive whiteboard, make sure that all cables pass between the two interactive whiteboard wall-mounting brackets and that the cables don't rest on the wall-mounting brackets.

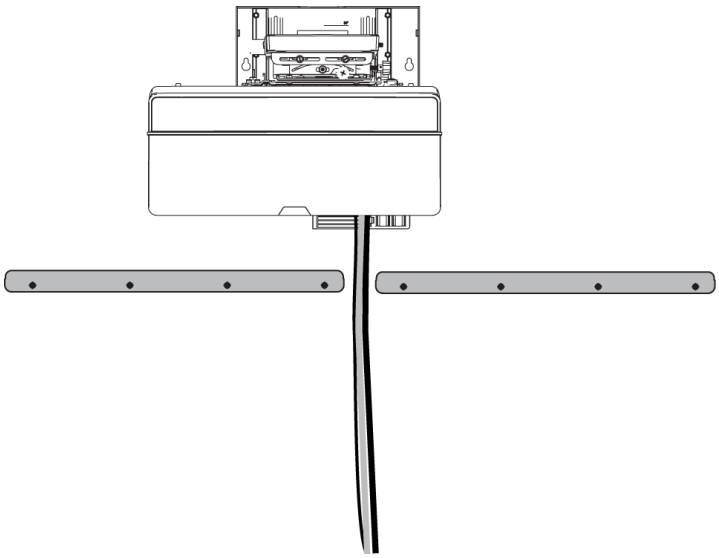

Installing SMART software

You must install SMART software, such as SMART Meeting Pro® software or SMART Notebook® collaborative learning software on the computer connected to your interactive whiteboard system to access all of its features.

Download SMART software from smarttech.com/software. These web pages list the minimum hardware requirements for each software version. If SMART software is already installed on your computer, take this opportunity to upgrade your software to ensure compatibility.

Setting up the projector image

You must focus the projected image, and then align the projected image.

Focusing the image

Use the focus lever on the bottom of the SMART UX80 projector to focus the projected image.

To focus and adjust the image

Turn the focus lever clockwise or counterclockwise until the image is in focus.

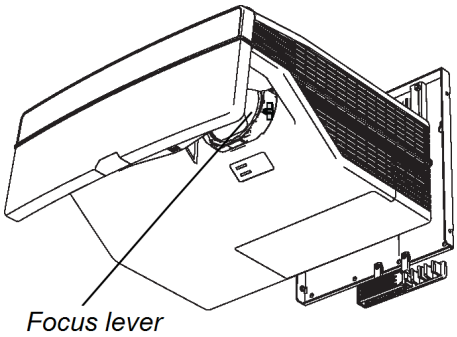

Aligning the image

Refer to these notes when aligning the projected image as described in the included *SMART Board 685ix2 interactive whiteboard system installation and cabling guide* (smarttech.com/kb/170472).

CAUTION

Never touch the lens or the mirror with your hands or a brush. This can disturb the focus or quality of image that your projector displays.

The projector's image alignment screen appears when you start your projector the first time, or you can access it from the startup screen menu any time.

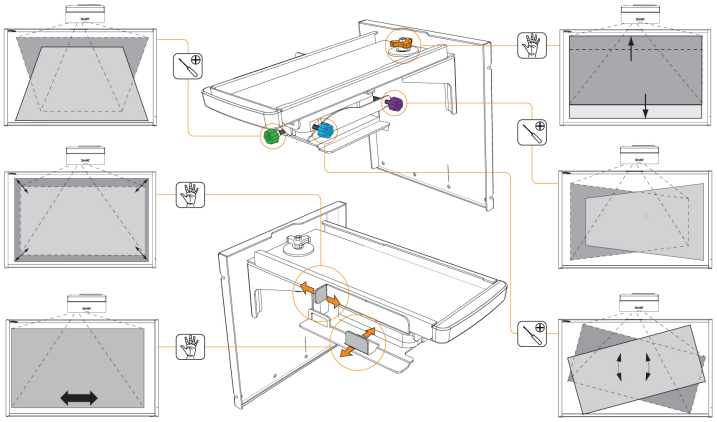

Use the mechanical adjustments described in the installation document and the image alignment screen to adjust the projected image size, shape and location so that you can see the full projected image clearly. Don't use other images, which might be cropped or scaled by the projector and result in a misleading projected image size, shape and location.

When adjusting keystone (tilt), ensure that the top and bottom edges of the image are horizontal before you position the left and right edges of the image relative to your interactive whiteboard.

To fine-tune the image, you might need to repeat all steps described in the installation document in smaller increments.

Projector connection diagram

You can connect a variety of peripheral devices to your projector, including DVD/Blu-ray players, document cameras, and other high-definition sources, as well as peripheral device outputs such as a secondary projector or other displays, and powered speakers.

NOTE

You might need to purchase third-party adapters to connect certain peripheral devices.

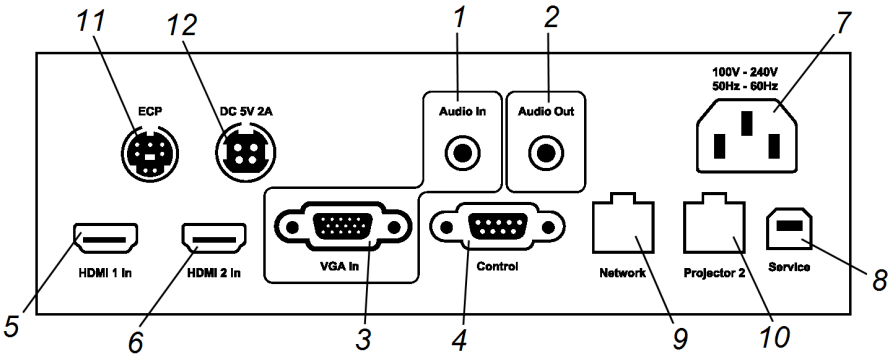

No.	Connector	Connect to:
1	3.5 mm phone jack audio input	Audio sources associated with the computer connected to the VGA video input source.
2	3.5 mm phone jack audio output	External speakers (optional, not included)
3	DB15F RGB VGA video input	Secondary computer (optional, not included)
4	DB9F RS-232	ECP cable harness
5	HDMI 1 In	Primary computer high-definition media (audio and video) source (not included)
6	HDMI 2 In	Additional high-definition media (audio and video) source (not included)
7	Power	Mains power supply
8	USB B	Do not use (for service access only)
9	RJ45 (Cat 5)	Network (for web page management and SNMP access) **network connection only**
10	RJ45 (Cat 5 crossover cable)	Projector 2 (for dual interactive whiteboard systems) **crossover cable connection only**
11	7-pin mini-DIN	ECP cable harness
12	4-pin power-DIN 5V/2A output	ECP cable harness

IMPORTANT

The 4-pin mini-DIN 5V/2A output provides power to SMART products only.

NOTES

- To connect your SMART Board 685 interactive whiteboard see the *SMART Board 685ix2 interactive whiteboard system installation and cabling guide* (smarttech.com/kb/170472).
- To connect accessories to your interactive whiteboard, refer to the documents included with the accessories and consult the SMART Support website (smarttech.com/support) for additional information.

Integrating your system with peripheral devices

For information on integrating your SMART Board 685ix2 interactive whiteboard system with peripheral devices, see *Connecting peripheral sources and outputs* on page 84.

Locking the pen tray to your interactive whiteboard

To learn how to lock the pen tray to your interactive whiteboard, see the *SMART Board 600 and D600 series interactive whiteboard installation and user's guide* (smarttech.com/kb/001414).

Chapter 3

Using your interactive whiteboard system

Using your projector 13
Using your remote control 13
Using the remote control buttons 14
Adjusting projector settings 15
Using your interactive whiteboard 22
Using the Extended Control Panel (ECP) 22

This chapter describes the basic operation of your interactive whiteboard system and explains how to set up your remote control, retrieve system information, access the projector's image adjustment options and integrate your interactive whiteboard system with peripheral devices.

Using your projector

This section explains how to use your projector remote control to access on-screen menus and change projector setting.

Using your remote control

The projector remote control enables you to access on-screen projector menus and change projector settings.

Using the remote control buttons

The projector remote control enables you to access on-screen menus and change projector settings. Use the **Power** button on the remote control or ECP to put the projector into Standby mode or to turn it on. You can also use the **Input** button on the remote control or ECP to switch sources on the projector.

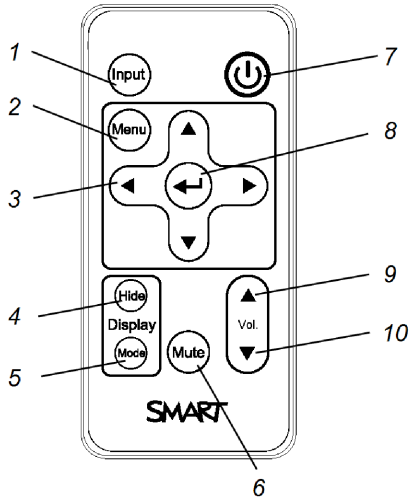

Number	Function	Description
1	Input	Select a video and audio input source on the projector and the associated USB input source on the ECP, if present.
2	Menu	Show or hide the projector menus.
3	◀ (Left), ▶ (Right), ▲ (Up) and ▼ (Down) arrows	Change the menu selections and adjustments.
4	Hide	Freeze, hide or display the image: • Press once to freeze the image. For example, you can display a question on the screen while you check your e-mail. • Press again to hide the image, that is, to display a black screen. • Press again to return to the live image.
5	Mode	Select a display mode.
6	Mute	Mute audio amplification.
7	⏻ (Power)	Turn on the projector or put it into Standby mode.
8	↵ (Enter)	Accept the selected mode or option.
9	▲ (Volume Up)	Increase audio amplification volume.
10	▼ (Volume Down)	Decrease audio amplification volume.

NOTE

The **Mute**, **Volume Up** and **Volume Down** buttons work only if there is an audio source connected to the projector for the selected video input source.

For information on using the remote control's Menu button to adjust the projector settings, see *Adjusting projector settings* on page 73.

Adjusting projector settings

The remote control's Menu button enables you to access the on-screen display to adjust the projector settings.

IMPORTANT

Keep your remote control in a safe place because there is no other way to access menu options.

Setting	Use	Notes
Image Adjustment menu		
Display Mode	Indicates the projector's display output (**SMART Presentation**, **Bright Room**, **Dark Room**, **sRGB** and **User**).	The default is **SMART Presentation**.
Brightness	Adjusts projector brightness from 0 to 100.	The default is 50.
Contrast	Adjusts the difference between the lightest and darkest parts of the image from 0 to 100.	The default is 50.
Frequency	Adjusts the display data frequency of the projected image from -5 to 5 to match the frequency of your computer's graphics card.	The default is 0. This setting applies to VGA inputs only.
Tracking	Synchronizes your projector's display timing with your computer's graphics card from 0 to 63.	This setting applies to VGA inputs only.

Setting	Use	Notes
H-Position	Moves the horizontal position of the source video left or right from 0 to 100 (relative to the projected image).	Don't adjust this setting unless you're advised to by SMART Support. Apply this setting only after you make all boom adjustments. This setting applies to VGA inputs only and is useful in situations where the source video is cut off.
V-Position	Moves the vertical position of the source video up or down from -5 to 5 (relative to the projected image).	Don't adjust this setting unless you're advised to by SMART Support. Apply this setting only after you make all boom adjustments. This setting applies to VGA inputs only and is useful in situations where the source video is cut off.
White Peaking	Adjusts the image color brightness from 0 to 10 while providing more vibrant white shades.	A value closer to 0 creates a natural image and a value closer to 10 enhances brightness. The default is 10.
Degamma	Adjusts the color performance of the display from 1 to 3.	The default is 2.
Color	Adjusts the Red, Green, Blue, Cyan, Magenta and Yellow colors on the projector from 0 to 100 to provide custom color and luminance output.	Each color has a default value of 100. Adjustments to the color settings register under the User mode.
Audio menu		
Volume	Adjusts the projector's volume amplification from -20 to 20.	The default is 0.
Mute	Mutes the projector's audio output.	The default is off. If you mute the projector's audio output and then increase or decrease the volume, the volume is restored automatically. You can prevent this from happening by disabling the volume control.
Disable Volume Control	Disables the projector's volume control and the ECP's volume control knob.	
System Output	Selects one or more speakers or other audio device.	Select **Line Out+Speaker**, **Line Out Only** or **Speaker Only**.

Setting	Use	Notes
Projector Functions menu		
3D On/Off	Turns the DLP Link technology 3D feature on or off.	The default is off.
3D Format	Displays the current 3D format (**Interleaved** or **Under-over**).	**Interleaved** breaks down the image frame for each eye, alternately displaying a line of visual information from each frame. **Under-over** concurrently displays horizontally stretched image frames for each eye, one above the other.
3D Invert Left-Right	Selects the 3D Invert setting (**L-R** or **R-L**).	**L-R** displays visual data for the left eye first. **R-L** displays visual data for the right eye first.
Auto Signal Detect	Enables or disables signal searching of input connectors.	The default is off. Select **On** to have the projector continuously switch inputs until it finds an active video source. Select **Off** to maintain signal detection in one input.
Lamp Reminder	Turns the lamp replacement reminder on or off.	This reminder appears 100 hours before the recommended lamp replacement.
Lamp Mode	Adjusts lamp brightness to **Standard** or **Economy**.	**Standard** displays a high-quality, bright image. **Economy** increases the lamp life by decreasing the brightness of the image.
Auto Power Off (minutes)	Sets the length of the auto power-off countdown timer between 1 and 240 minutes.	The default is 120 minutes. The timer begins to count down when the projector no longer receives a video signal. The timer finishes when the projector enters Standby mode. Select **0** to turn off the timer.
Zoom	Adjusts the zoom to the center of the image in or out from 0 to 30.	The default is 0. Zooming in cuts off the outer edges of the source video.
USB 1 source	Enables touch for the selected video source VGA out,USB 2 will disabled by associating the video source with the room computer USB receptacle (USB1) on the ECP.	The default is VGA out. When the user switches to the video source the interactive whiteboard recognizes touch from the device connected to the room computer USB receptacle on the ECP. Selecting Disabled disables the room computer USB receptacle on the ECP.

Setting	Use	Notes
USB 2 source	Enables touch for the selected video source HDMI, USB 1 will be disabled by associating the video source with the guest computer USB receptacle (USB2) on the ECP.	The default is HDMI. When the user switches to the video source the interactive whiteboard recognizes touch from the device connected to the guest computer USB receptacle on the ECP. Selecting Disabled disables the room computer USB receptacle on the ECP.
Projector ID	Displays the projector's unique ID number (from 0 to 99) within your organization's network.	You can refer to or change this number when using the network remote management feature (see *Remotely managing your system through a network interface* on page 47).
Aspect Ratio	Adjusts the image output to **Fill Screen**, **Match Input** or **16:9**.	The default is **Fill Screen**. **Fill Screen** produces an image that fills the entire screen by stretching and scaling the source video to match the projector's native resolution and aspect ratio. **Match Input** displays the source video in its native resolution and aspect ratio. As a result, unused space could appear along the top and bottom edges of the screen (letterbox format) or along the left and right edges of the screen (pillarbox format). See *Video format* on page 81 for descriptions of each mode.
Startup Screen	Selects the type of startup screen (**SMART**, **Capture User Startup Screen**, **Preview Startup Screen**), or Image Alignment Screen.	This screen displays when the projector lamp is starting and a video source signal isn't displayed. **SMART** displays the default SMART logo on a blue background. **Capture User Startup Screen** closes the on-screen display menu and captures the entire projected image. The captured image is displayed the next time the on-screen display opens. (The capture can take up to one minute, depending on the complexity of the background graphic.) **Preview Startup Screen** enables you to preview the default or captured startup screen. **Image Alignment Screen** enables you to adjust the projected image size, shape and location.

Setting	Use	Notes
Image Alignment Screen	Enables you to adjust the projected image size, shape and location.	The image alignment screen appears the first time you start your projector. However, you can access it from the startup screen menu any time. Press **Menu** or **Enter** to close it.
Set to Default?	Resets projector settings to their default values.	If you select **Yes**, all projector settings reset to their defaults, reversing any menu changes you made. This action is irreversible. Don't adjust this setting unless you want to reset all of the applied settings, or unless you're advised to by a SMART Support specialist.
USB Source Select	Opens a sub-menu that enables you to select the video input on your projector and the USB receptacle on the ECP.	The defaults are: • HDMI-1, USB 1 • HDMI-2, Disabled (no associated USB input) • VGA-1, USB 2
Network menu		
Network	Activates the projector's RJ45 connector and network features.	
Status	Displays the current network status (**Connected**, **Disconnected** or **Off**).	The default is off.
DHCP	Displays the status of the network's Dynamic Host Configuration Protocol (DHCP) as **On** or **Off**.	The default is on. **On** enables a DHCP server on the network to automatically assign an IP address to the projector. **Off** enables an administrator to assign an IP address manually.
Password Reminder	E-mails the network password to the predefined e-mail recipient.	See *Web page management* on page 47 to set up a destination e-mail address.

Setting	Use	Notes
IP Address	Displays the projector's current IP address in values between 0.0.0.0 and 255.255.255.255.	To change the projector's IP address, use the RS-232 connector or use a DHCP server to assign a dynamic IP address, and then set a static IP address using the network remote management feature (see *Remotely managing your system through a network interface* on page 47).
Subnet Mask	Displays the projector's subnet mask number in values between 0.0.0.0 and 255.255.255.255.	
Gateway	Displays the projector's default network gateway in values between 0.0.0.0 and 255.255.255.255.	
DNS	Displays the projector's primary domain name server (DNS) IP address in values between 0.0.0.0 and 255.255.255.255.	
MAC Address	Displays the projector's MAC address in xx-xx-xx-xx-xx-xx format.	
Group Name	Displays the projector's workgroup name as set by an administrator (maximum 12 characters).	You can set the projector's workgroup name using the remote management features (see *Remotely managing your system through a network interface* on page 47 and *Remotely managing your system through an RS-232 serial interface* on page 57).
Projector Name	Displays the projector's name as set by an administrator (maximum 12 characters).	You can set the projector's name using the remote management features (see *Remotely managing your system through a network interface* on page 47 and *Remotely managing your system through an RS-232 serial interface* on page 57).
Location	Displays the projector's location as set by an administrator (maximum 16 characters).	You can set the projector's location using the remote management features (see *Remotely managing your system through a network interface* on page 47 and *Remotely managing your system through an RS-232 serial interface* on page 57).

Setting	Use	Notes
Contact	Displays the contact name or number for projector support as set by an administrator (maximum 16 characters).	You can set the contact name or number using the remote management features (see *Remotely managing your system through a network interface* on page 47 and *Remotely managing your system through an RS-232 serial interface* on page 57).
Language menu		
Language	Selects language preference.	Projector menu support is available in English (default), Chinese (Simplified), Chinese (Traditional), Czech, Danish, Dutch, Finnish, French, German, Greek, Italian, Japanese, Korean, Norwegian, Polish, Portuguese (Brazil), Portuguese (Portugal), Russian, Spanish and Swedish.
Information menu		
Lamp Hours	Displays the current number of lamp usage hours from 0 to 4000 hours from when it was last reset.	Always reset the lamp hours after you replace a lamp, because lamp service reminders are based on the current hours of use. See *Resetting the lamp hours* on page 29 for details on the lamp hours reset procedure.
Input	Displays the currently displayed video input source (**VGA**, **HDMI1**, **HDMI2** or **None**).	
Resolution	Displays the projector's most recently detected video source signal resolution and refresh rate.	If there is no current video input source signal, this setting displays the last known source signal image resolution and refresh rate.
Firmware Version	Displays the projector's digital display processor (DDP) firmware version in x.x.x.x format.	
MPU Version	Displays the projector microprocessor unit (MPU) firmware version in x.x.x.x format.	

Setting	Use	Notes
Network Version	Displays the projector's network communications processor firmware version in x.x.x.x format.	If you haven't enabled the **Network and VGA Out** setting, this setting is unable to display the projector's network communications processor firmware version and displays 0.0.0.0 instead.
Model Number	Displays the projector's model number.	
Serial Number	Displays the projector's serial number.	
UCP ports 1 / 2	Reserved for future application.	

Using your interactive whiteboard

Refer to the *SMART Board 600 and D600 series interactive whiteboard installation and user's guide* (smarttech.com/kb/001414) for more information on using your interactive whiteboard.

When you connect your SMART Board interactive whiteboard to a computer with SMART software, you can access the full capabilities of your interactive whiteboard.

For more information on this software, press the **Help** button on your interactive whiteboard pen tray.

For additional resources, go to smarttech.com, click the flag icon in the top-right corner, and then select your country and language. In the Support section of this website, you'll find up-to-date, product-specific information, including setup instructions and specifications.

The SMART training website (smarttech.com/training) includes an extensive library of training resources you can refer to when first learning to set up or use your interactive whiteboard system.

Using the Extended Control Panel (ECP)

The ECP gives you control of the basic operations of your interactive whiteboard system. Additionally, you can connect peripheral devices directly to the ECP, as described in *Connecting peripheral sources and outputs* on page 84. Press the **Power** ⏻ button on the ECP or remote control to put the projector system into Standby mode or turn it on. Press the **Input** button on the ECP or remote control to switch sources on the projector.

IMPORTANT

- Keep your remote control in a safe place because there is no other way to access menu options.
- Do not disconnect cables from the ECP to connect peripheral devices because you could disconnect controls for your interactive whiteboard.

The following diagram and table describe the components of the ECP:

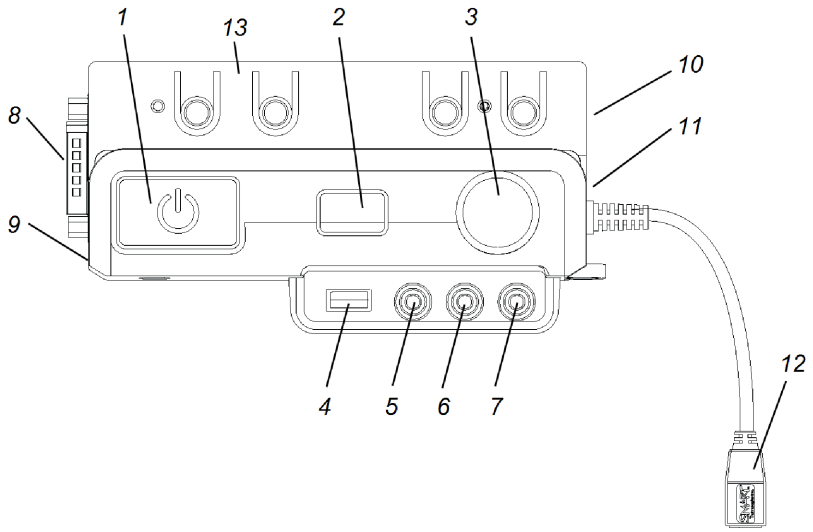

Number	Function
Front	
1	Power ⏻ and ECP status indicator light
2	Input selection
3	Volume control
4	USB A receptacle (for USB drives)
5	RCA jack composite video input (not used in this configuration)
6	RCA audio jack right input (not used in this configuration)
7	RCA audio jack left input (not used in this configuration)
Left side	
8	DB15 socket (ECP cable harness only)
9	USB A receptacle (for any USB peripheral, up to 500mA)
Right side	

Number	Function
10	USB B receptacle (for a secondary computer such as a laptop) **NOTE** Use the projector's USB menu to ensure that the appropriate projector video input source is mapped to use this USB #2 port on the ECP. By default, this port is enabled only when the HDMI-1 video input on the projector is active.
11	USB A receptacle (for SMART Board interactive whiteboard only)
12	USB B receptacle (for your primary computer) **NOTE** Use the projector's USB menu to ensure that the appropriate projector video input source is mapped to use this USB #1 port on the ECP.
Top	
13	Not used

Chapter 4

Maintaining your interactive whiteboard system

Maintaining your interactive whiteboard 25
Preventing damage to your interactive whiteboard 25
Keeping the writing surface clean 26
Cleaning the pen tray 26
Cleaning the projector 27
Focusing and adjusting the projector image 27
Removing and replacing the projector lamp module 27
Resetting the lamp hours 29
Replacing the remote control battery 30

This chapter includes methods for properly cleaning and preventing damage to your SMART Board interactive whiteboard system.

Maintaining your interactive whiteboard

With proper care, your SMART Board interactive whiteboard will provide years of trouble-free service.

Preventing damage to your interactive whiteboard

Although the surface of your interactive whiteboard is very durable, take the following precautions to prevent damage.

- Don’t use sharp or pointed objects, such as ballpoint pens or pointers, as writing tools.
- Replace the pen nib when the nib wears out.
- Don’t use low-odor dry-erase markers because they can be very difficult to erase. Use standard (high-odor) dry-erase markers that show a warning to use them only in well-ventilated areas.
- Don’t use adhesive tape on the interactive surface.
- Don’t use abrasive erasers or harsh chemicals to clean your product.

Keeping the writing surface clean

Follow these tips to keep the interactive whiteboard's surface clean.

- Clean your interactive whiteboard at least every six months.
- Don't spray cleaner directly onto the interactive whiteboard's surface. Instead, spray a light amount of cleaner on a cloth and then gently wipe the interactive surface.
- Don't allow excess cleaner to flow onto the crack between the lower frame and the writing surface, or into the pen tray slots.

IMPORTANT

Turn off your interactive whiteboard system before you clean it so that you do not scramble the desktop icons or inadvertently activate applications when you wipe the interactive surface.

TIP

To view dirt or streaks more easily, set your projector to Standby (lamp off) mode.

Cleaning the pen tray

If the infrared sensors in the sides of the pen tools' slots become obstructed by dirt, spray a household, alcohol-free glass cleaner, such as Windex cleaner, on a cotton swab and then carefully clean the infrared transmitter and receiver.

Cleaning the projector

WARNING

Cleaning a wall-mounted projector can result in a fall or injury. Use caution when climbing a ladder.

CAUTION

- Before you clean the projector, press the **Power** button twice on the ECP or remote control to put the system in Standby mode, and then wait 30 minutes for the lamp to cool completely.
- Never touch the lens or the mirror with your hands or a brush.
- Do not allow liquids or commercial solvents of any kind to flow into the projector base or head.

  Do not spray cleaners or solvents near any part of the projector because they can spread a chemical mist on some of the projector's components and lamp, resulting in damage, staining or poor image quality.
- Do not use compressed air to clean the projector.

When cleaning the projector's lens or mirror:

- Use a bellows bulb or air blower bulb (commonly found in audio-visual supply stores) to blow off dust.
- If wiping the lens or mirror is unavoidable, wear protective gloves and gather the cleaning cloth into a ball. Gently fan the cleaning cloth across the lens or mirror like you would a feather duster. Do not apply any pressure to the lens or mirror.

Focusing and adjusting the projector image

For information on focusing and adjusting the projector image, see *Setting up the projector image* on page 9.

Removing and replacing the projector lamp module

Eventually the lamp module will dim, and a message will appear reminding you to replace the lamp. Make sure you have a replacement projector lamp module before proceeding.

For instructions on how to replace the projector lamp module, go to smarttech.com/kb/170389.

WARNING

- Replace the lamp when the projector displays its lamp life warning message. If you continue to use the projector after this message appears, the lamp can shatter or burst, scattering glass throughout the projector.
- If the lamp shatters or bursts, leave and then ventilate the area.

  Next do the following:

  - Avoid touching the glass fragments because they can cause injury.
  - Wash your hands thoroughly if you have come into contact with lamp debris.
  - Thoroughly clean the area around the projector, and discard any edible items placed in that area because they could be contaminated.
  - Call your authorized SMART reseller for instructions. Do not attempt to replace the lamp.
- When replacing the projector lamp:
  - Put the projector into Standby mode and wait 30 minutes for the lamp to cool completely.
  - Do not remove any screws other than those specified in the lamp replacement instructions.
  - Wear protective eyewear while changing the lamp. Failure to do so can cause injuries including loss of eyesight if the lamp shatters or bursts.
  - Use only replacement lamps approved by SMART Technologies. Contact your authorized SMART reseller for replacement parts.
  - Never replace the lamp module with a previously used lamp module.
  - Always handle the fragile lamp module with care to prevent premature lamp failure or exposure to mercury. Use gloves when touching the lamp. Do not touch the lamp with your fingers.
  - Recycle or dispose of the lamp module as hazardous waste in accordance with local regulations.
- See smarttech.com/compliance for the projector's Material Safety Data Sheets (MSDS) documents.

IMPORTANT

Fully close the lamp door on the projector after replacing the lamp module. If the lamp door is not fully closed, a safety switch turns off power to the projector.

Resetting the lamp hours

After you replace the lamp module, you need to access the projector service menu to reset the lamp hours. To prevent accidental errors, only a system administrator should perform this procedure.

NOTE

Always reset the lamp hours after you replace the lamp, because lamp service reminders are based on the current hours of use.

To reset the lamp hours

1. Using the remote control, press the following buttons quickly to access the service menu: **Down**, **Up**, **Up**, **Left**, **Up**.

   CAUTION

   Do not adjust any settings in the service menu other than those listed in this guide. Changing other settings can damage or affect the operation of your projector and may invalidate your warranty.

2. Scroll down to *Lamp Hour Reset* and then press **Enter**.

   CAUTION

   Do not reset the lamp hours unless you have just replaced the lamp module. Resetting the lamp hours on an old lamp can damage your projector as a result of lamp failure.

3. Scroll down to *Exit* and then press **Enter** to exit the projector service menu.

Replacing the remote control battery

Follow this procedure to replace the remote control battery.

WARNING

- Reduce the risk associated with a leaking battery in the projector's remote control by following these practices:
  - Use only the specified CR2025 coin-cell battery.
  - Remove the battery when the remote control is unused for an extended period.
  - Do not heat, disassemble, short or recharge the battery, or expose it to fire or high temperatures.
  - Avoid eye and skin contact with the battery if it has a leak.
- Dispose of the exhausted battery and product components in accordance with applicable regulations.

To replace the remote control battery

1. Hold down the side release on the left side of the battery holder and pull the battery holder completely out of the remote control.

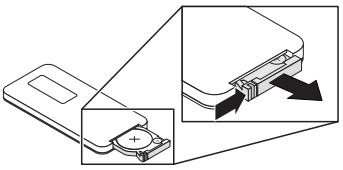

2. Remove the old battery from the battery holder and replace it with a CR2025 coin-cell battery.

   IMPORTANT

   Align the battery's positive (+) and negative (–) terminals with the correct signs on the battery holder.

3. Insert the battery holder into the remote control.

Chapter 5

Troubleshooting your interactive whiteboard system

Before you start 32
- Locating status lights 32
- Locating serial numbers 33

Determining your interactive whiteboard system's status 34

Resolving interactive whiteboard issues 36
- Resolving operation issues 36
- Resolving connection issues 37
- Resolving controller module issues 37

Resolving projector issues 37
- Resolving projector errors 37
  - Your projector stops responding 37
  - The "Projector Overheated", "Fan Failure", "Lamp Failure" or "Color Wheel Failure" message appears 38
  - The "Lamp Failure" message appears 39
  - The projector Power and Service lights are off 39
- Resolving image issues 40
  - Loss of signal 40
  - Partial, scrolling or incorrectly displayed image 41
  - Unstable or flickering image 41
  - Frozen image 42
  - The image from your connected laptop computer isn't projected 42
  - Unaligned projected image 42

Resolving audio issues 43

Resolving network communication issues 44

Resolving ECP issues 45

Accessing the service menu 45
- Retrieving your password 45
- Resetting the projector 46

Transporting your interactive whiteboard system 46

This chapter provides basic troubleshooting information for your interactive whiteboard system.

For issues not covered in this chapter, consult the SMART Support website (smarttech.com/support) or contact your authorized SMART reseller (smarttech.com/where).

Before you start

Before you troubleshoot your interactive whiteboard system or contact SMART Support or your authorized SMART reseller for assistance, you need to do the following:

- Locate your interactive whiteboard system's status lights
- Locate your interactive whiteboard system's serial numbers

Locating status lights

You interactive whiteboard system consists of several components, which have their own status lights:

- Your interactive whiteboard's Ready light is located on the lower-right of the frame.
- Your projector's Power ⏻ and Service 🔧 lights are located on the bottom of the projector.

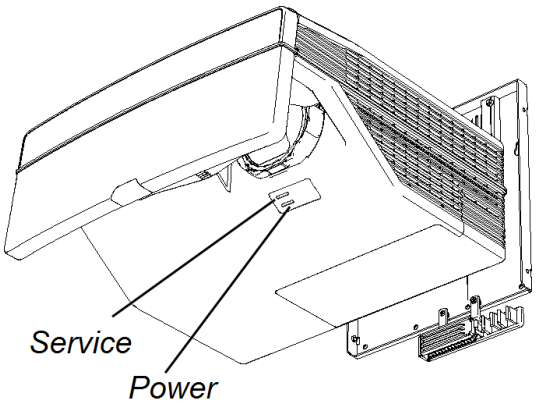

- The ECP's **Power** ⏻ button (see *Using the Extended Control Panel (ECP)* on page 22) also functions as a status light.

Locating serial numbers

The serial number on your SMART Board 600 series interactive whiteboard is located on the lower-right edge of the interactive whiteboard's frame. For more information, see the *SMART Board 600 and D600 series interactive whiteboard installation and user's guide* (smarttech.com/kb/001414).

The SMART UX80 projector's serial number is located on the top of the projector.

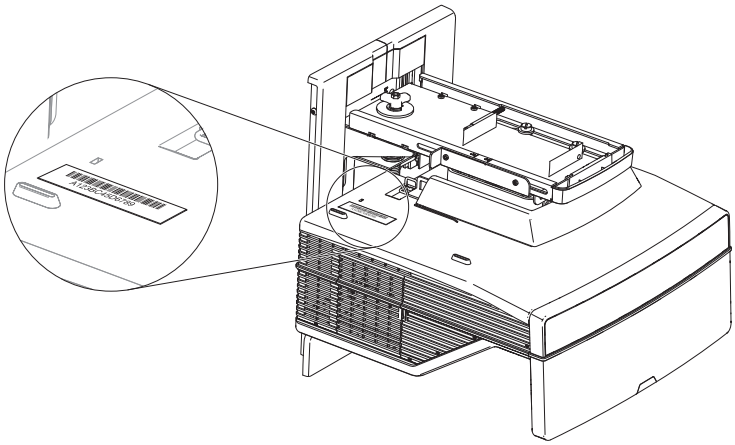

The serial number is also located at the bottom of the projector and can be seen when you stand on the floor and look up at the projector. Open the cable cover at the bottom of the projector and locate the serial number next to the cable connectors.

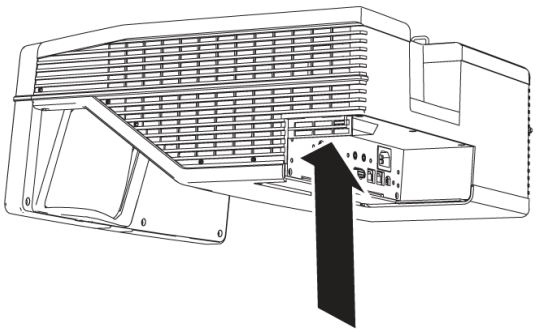

TIP

You can also access the projector's serial number through the on-screen menu. For more information, see *Adjusting projector settings* on page 73.

For the locations of serial numbers on other components and accessories, see smarttech.com/support.

Determining your interactive whiteboard system's status

Use the following table to determine the status of your interactive whiteboard system:

Projector Power light	Projector Service light	ECP light	Interactive whiteboard Ready light	Projected image	Touch and pen control	Status and related troubleshooting
Normal operating statuses						
Solid green	Off	Solid green	Solid green	Correct	Full control	The system is operating normally. If image or sound issues occur, see the remaining sections of this chapter for troubleshooting information.
Flashing green	Off	Flashing green	Off	None	None	The system is starting up.
Solid amber	Off	Solid amber	Off	None	None	The system is in Standby mode.
Flashing amber	Off	Flashing amber	Off	None	None	The system is entering Standby mode.

Projector Power light	Projector Service light	ECP light	Interactive whiteboard Ready light	Projected image	Touch and pen control	Status and related troubleshooting
Solid green	Off	Solid green	Solid amber	N/A	None	The interactive whiteboard's controller module is starting up. If this process takes longer than 10 seconds, see *Resolving controller module issues* on page 37.
Solid green	Off	Solid green	Flashing amber	N/A	N/A	The interactive whiteboard's controller module is ready to receive a firmware update or is applying a firmware update. If the Ready light flashes amber but no firmware update appears on the screen, see *Resolving controller module issues* on page 37.
Error statuses						
Solid green	Off	Solid green	Solid green	Incorrect	Full control	There's an issue with the projected image. See *Resolving image issues* on page 40.
Solid green	Off	Solid green	Solid green	Correct	None	There's an issue with the interactive whiteboard. See *Resolving operation issues* on the next page.
Solid green	Off	Solid green	Flashing green	Correct	Touch only	SMART Product Drivers isn't installed or running correctly on the connected computer.
Solid green	Off	Solid green	Off OR Solid red	N/A	None	There's an issue with the connections between the interactive whiteboard and the other components of the system. See *Resolving connection issues* on page 37.
Solid green	Off	Off	Off OR Solid red	N/A	N/A	The ECP isn't receiving power. See *Resolving ECP issues* on page 45.
Solid amber	Flashing red	N/A	N/A	None	N/A	There's an issue with the projector lamp. See *The "Lamp Failure" message appears* on page 39.
Off	Flashing red	N/A	Off	None	None	The projector's operating temperature has been exceeded. See *The "Projector Overheated", "Fan Failure", "Lamp Failure" or "Color Wheel Failure" message appears* on page 38.
Off	Solid red	N/A	N/A	None	N/A	There's an issue with the projector's fan or color wheel. See *The "Projector Overheated", "Fan Failure", "Lamp Failure" or "Color Wheel Failure" message appears* on page 38.

Projector Power light	Projector Service light	ECP light	Interactive whiteboard Ready light	Projected image	Touch and pen control	Status and related troubleshooting
Solid amber	Solid red	N/A	N/A	None	N/A	Contact SMART Support.
Off	Off	Off	Off	None	None	The projector power cable isn't properly connected. OR There's an issue with the mains power supply (for example, the circuit breaker is off). OR The projector's lamp door is open. Fully close the lamp door.

Resolving interactive whiteboard issues

This section includes information on resolving issues with your interactive whiteboard.

For information not covered in this section, see the *SMART Board 600 and D600 series interactive whiteboard installation and user's guide* (smarttech.com/kb/001414).

Resolving operation issues

To resolve operation issues, complete the following tasks:

- Confirm that the 4-wire cable (and 2-wire cable, if present) is connected to the interactive whiteboard's controller module.
- If necessary, complete additional troubleshooting with the guidance of SMART Support using SMART Board Diagnostics.

- Confirm that the 4-wire cable (and 2-wire cable, if present) is connected between the interactive whiteboard and the interactive whiteboard's controller module.
- Confirm that the 4-wire cable (and 2-wire cable, if present) is connected between the interactive whiteboard and the interactive whiteboard's controller module.
- Confirm that the interactive whiteboard's USB cable is properly connected between the computer and the correct USB port on the ECP.
- Reset the interactive whiteboard system. If necessary, complete additional troubleshooting with the guidance of SMART Support using SMART Board Diagnostics.

Resolving connection issues

To resolve connection issues, complete the following tasks:

- Confirm that the ECP cable harness's 4-pin power mini-DIN connector is properly connected to the **DC 5V 2A** connector on the projector.
- Confirm that the USB cable is properly connected from the interactive whiteboard to the correct USB port on the ECP.
- Confirm that the USB cable is properly connected from a fully functional USB port on the computer to the correct USB port on the ECP.
- Confirm that the projector's on-screen menu option for the USB source is set to associate the USB port on the ECP with the correct video source on the projector.
- If necessary, complete additional troubleshooting on any devices between the USB connection from the computer to the interactive whiteboard system, including any USB hubs and extension cables.

Resolving controller module issues

If the controller module takes longer than 10 seconds to start up, disconnect the interactive whiteboard's USB cable, wait 10 seconds, and then reconnect it.

If the issue persists, run the firmware upgrade utility, located in the same folder as your SMART Product Drivers (for example, **C:\Program Files\SMART Technologies\SMART Board Drivers\SMARTFirmwareUpdater.exe** [Windows® operating systems] or **/Applications/SMART Board Drivers/SMARTFirmwareUpdater.app** [Mac computers]). For more information about performing a firmware upgrade, see smarttech.com/kb/123545 or contact SMART support.

If the Ready light indicates that a firmware update is in progress but no update is actually taking place, disconnect the interactive whiteboard's USB cable, wait a few seconds, and then reconnect it.

Resolving projector issues

Resolving projector errors

System administrators can resolve the following projector errors on their own prior to contacting SMART Support. Performing initial troubleshooting on your projector reduces the time of a support call.

Your projector stops responding

If your projector stops responding, perform the following procedure.

To restart an unresponsive projector

1. Put the projector into Standby mode, and then wait 30 minutes for it to cool down.
2. Disconnect the power cable from the power outlet, and then wait at least 60 seconds.
3. Connect the power cable, and then turn on the projector.

The “Projector Overheated”, “Fan Failure”, “Lamp Failure” or “Color Wheel Failure” message appears

If the “Projector Overheated”, “Fan Failure” or “Color Wheel Failure” message appears and the projector stops projecting an image, one of the following issues is occurring:

- The temperature is overheating but the “Projector Overheated” message fails to display.
- The temperature outside the projector is too high.
- One of the fans has failed.
- The projector has a color wheel issue.

To resolve the “Projector Overheated”, “Fan Failure”, or “Color Wheel Failure” error

1. Put the projector into Standby mode, and then wait 30 minutes for it to cool down.
2. If your room is hot, lower the temperature if possible.
3. Ensure that nothing is blocking the projector’s air intake and exhaust.
4. Disconnect the power cable from the power outlet, and then wait at least 60 seconds.
5. Connect the power cable, and then turn on the projector.
6. Adjust the fan speed using the service menu.
7. If the previous steps don’t resolve the issue, put the projector into Standby mode, disconnect the power cable, and then contact your authorized SMART reseller.

The “Lamp Failure” message appears

If the “Lamp Failure” message appears, one of the following issues is occurring:

- The lamp is overheating, likely due to blocked air vents.
- The lamp has reached the end of its life.
- The projector has an internal problem.

To resolve the “Lamp Failure” error

1. Restart the projector (see *Your projector stops responding* on page 37).
2. Check the remaining lamp hours using the on-screen menu (see *Adjusting projector settings* on page 73).

   If the lamp has more than 2000 hours of use in Standard mode or 3000 hours of use in Economy mode, it’s near the end of its lifespan.
3. Replace your lamp as described in *Removing and replacing the projector lamp module* on page 27.
4. If replacing the lamp module doesn’t resolve the issue, put the projector into Standby mode, disconnect the power cable, and then contact your authorized SMART reseller.

The projector Power and Service lights are off

If the projector Power and Service lights are both off, one of the following issues is occurring:

- There was a power outage or a power surge.
- A circuit breaker or a safety switch was tripped.
- The projector isn’t connected to the power source.
- The projector has an internal problem.
- The projector’s lamp door is open.

To resolve the unlit projector Power and Service lights issue

1. Check the power source, and then make sure that all cables are connected.
2. Confirm that the projector is connected to an active power outlet.
3. Make sure the pins on the connectors aren’t broken or bent.
4. Check that the projector’s lamp door is installed properly and the lamp door is fully closed.
5. Connect the power cable, and then turn on the projector.

6. If the previous steps don't resolve the issue, disconnect the power cable and then contact your authorized SMART reseller.

Resolving image issues

To resolve common image issues, complete the following tasks:

- Ensure the computer or other video source is on and set to display a resolution and refresh rate supported by the projector (see *Video format* on page 81).
- Ensure the video source is properly connected to the projector.
- Press the Input Select button on the remote control or ECP to switch to the correct video source.

If these tasks don't resolve the issue, refer to the following sections for additional troubleshooting information.

Loss of signal

If a video source signal isn't detected, if it's out of range of the projector's support video modes or if the signal is being switched to a different device or input, the projector doesn't show a source signal and instead displays the SMART logo on a blue screen.

To resolve signal loss issues

1. Wait approximately 45 seconds for the image to synchronize. Some video signals require a longer synchronization period. Cycling back through inputs to the one you want also helps image synchronization.
2. If the image doesn't synchronize, check the cable connections to the projector and the ECP.
3. Ensure that the image signal is compatible with the projector (see *Video format* on page 81).
4. If there are any extension cables, switch boxes, connection wall plates or other devices in the video connection from the computer to the projector, temporarily remove them to ensure they aren't causing the video signal loss.
5. If your projector still doesn't show a source signal, contact your authorized SMART reseller.

Partial, scrolling or incorrectly displayed image

NOTE

This procedure may vary depending on your version of Windows® operating system or Mac OS X operating system software and your system preferences. The following procedures apply to Windows 7 operating systems and Mac OS X 10.8 operating system software.

To resolve a partial, scrolling or incorrectly displayed image on your Windows computer

1. Select **Start > Control Panel**.
2. Click **Display**, and then select **Adjust resolution**.
3. Verify that your display resolution setting is 1280 × 800 (WXGA).
4. Click **Advanced settings**, and then click the **Monitor** tab.
5. Verify that the screen refresh rate is 60 Hz.

To resolve a partial, scrolling or incorrectly displayed image on your Mac computer

1. Select **Apple Menu > System Preferences**.

   The *System Preferences* dialog box appears.
2. Click **Displays**.
3. Verify that your display resolution setting is 1280 × 800 (WXGA).
4. Verify that the screen refresh rate is 60 Hz.

Unstable or flickering image

If the projector's image is unstable or flickering, the frequency or tracking settings on your input source could be different from the settings on your projector.

IMPORTANT

Write down your setting values before adjusting any of the settings in the following procedure.

To resolve your unstable or flickering image

1. Check the display mode of your computer's graphics card. Make sure it matches one of the projector's compatible signal formats (see *Video format* on page 81). Refer to your computer's manual for more information.
2. Configure the display mode of your computer's graphics card to make it compatible with the projector. Refer to your computer's manual for more information.

3. Adjust the **Frequency**, **Tracking**, **H-position** and **V-position** settings in the on-screen menu. See *Adjusting projector settings* on page 73.
4. Optionally, reset the projector as described in *Resetting the projector* on page 46 to adjust the frequency and tracking to their original values.

> **IMPORTANT**
> This action resets all values to their defaults.

Frozen image

If your projector has a frozen image, perform the following procedure.

To resolve a frozen image

1. Ensure that the Hide Display feature is off.
2. Press the **Hide** button on the projector's remote control to hide or show the display.
3. Ensure that your source device, such as your DVD player or computer, isn't malfunctioning.
4. Put the projector into Standby mode, and then wait 30 minutes for it to cool down.
5. Disconnect the power cable from the power outlet, and then wait at least 60 seconds.
6. Connect the power cable, and then turn on the projector.
7. If the previous steps don't resolve the issue, contact your authorized SMART reseller.

The image from your connected laptop computer isn't projected

Laptop computer settings can interfere with projector operations.

Some laptop computers deactivate their screens when you connect a secondary display. Refer to your computer's manual for details on reactivating the computer's display screen.

Unaligned projected image

Alignment errors occur when the projected image isn't perpendicular to the screen. Alignment errors can occur when you mount your interactive whiteboard system on an uneven surface or a wall that has obstructions, or if you swivel the projector too far from the vertical center of your interactive whiteboard.

Use the instructions in the included *SMART Board 685ix2 interactive whiteboard systems installation instructions* (smarttech.com/kb/170472) to eliminate most image alignment issues.

The projector image can slip if the projector is moved often or installed in a location prone to vibration, such as next to a heavy door. Follow these precautions to help prevent the image from becoming unaligned:

- Make sure that the installation wall is plumb and square and doesn't move or vibrate excessively.
- Make sure that there are no obstructions behind the projector's wall-mounting bracket, and that the bracket is firmly secured to the wall according to the installation instructions.
- Confirm that all cables are held in place with the appropriate cable management clip.
- Adjust the projected image. See the included *SMART Board 685ix2 interactive whiteboard system textless installation guide* (smarttech.com/kb/170472) and *Aligning the image* on page 9.

Resolving audio issues

The projector includes an internal speaker. You can also connect an external audio system to the audio output connector in the projector's connection panel. If sound isn't coming from either your internal speaker or your external audio system, perform the following procedures.

NOTE

You might need to configure your computer to pass audio through HDMI if it isn't configured automatically.

To resolve audio issues, complete the following tasks:

- If you are using optional external speakers or an external audio system, ensure that the speakers' or audio system's cables are properly connected to the audio output plug on the projector's connection panel.
- For the purpose of troubleshooting, enable both the internal and external speakers by ensuring that the System Output Switch in the audio menu is set to **Line Out + Speaker**.
- Ensure that the video cable from your computer is connected to the appropriate video connector on your projector.
- If you're using a VGA cable, ensure that the analog audio cable from your computer's audio output is connected to the projector's VGA audio input connector.
- Press the **Mute** button on the projector's remote control, and if Audio Mute is on, turn it off.
- Check the ECP's volume knob or use the projector's remote control to ensure that the volume isn't at the lowest setting.

- If you're using an external audio system, ensure that your speaker or audio system is on and that the volume is turned up.
- Check that your video source input, such as your computer or video device, isn't malfunctioning. Ensure that its audio output is on and that the volume isn't set to the lowest position.

  NOTE

  You must display the source input's video to play its audio through the connected speakers or audio system.

- Ensure that the correct audio output device is selected in your computer's Sound settings.
- If your computer's video signal is connected with an HDMI cable, ensure that your computer's audio output is also configured to output audio via the same HDMI cable. If your computer's video signal is connected with a VGA cable, ensure that your computer's audio output is configured to use its analog audio cable connected between the computer and the projector.

  NOTE

  If you're using an HDMI video input on the projector, do not use any DVI to HDMI adapters, as these will not transfer audio from the DVI source to the HDMI input on the projector.

- If the previous steps don't resolve the issue, contact your authorized SMART reseller.

Resolving network communication issues

If you don't have network access, perform the following procedure to troubleshoot your system.

To resolve network communication issues

1. Ensure that your network cable is properly connected to the RJ45 connection on the projector's connection panel. There are two RJ45 ports: one is for the network and one is for projector 2. Ensure that the network cable is connected to the correct one.
2. Ensure that the LAN warning light on the projector is green. To activate the projector's network features, use the "vgaoutnetenable=on" RS-232 command (see *Projector programming commands* on page 60) or enable the **Network and VGA Out** setting (see *Adjusting projector settings* on page 73). The network features on the projector don't work until you complete one of these tasks.

   Ensure that the network is enabled in the projector's OSD.

3. To ensure that the network function is enabled, press the **Menu** button, and then select the **Network Settings** menu to check the IP address. See *Adjusting projector settings* on page 73 for a description of the IP address field. Enter this IP address into your browser or SNMP agent.
4. If you still don't have network access, contact your network administrator. If your administrator is unable to resolve the issue, contact your authorized SMART reseller.

Resolving ECP issues

If the ECP isn't receiving power, complete the following tasks:

- Confirm that the ECP cable harness's ECP connector is properly connected to the ECP.
- Confirm that the ECP cable harness's 7-pin min-DIN connector and 4-pin min-DIN connectors are both properly connected to the ECP connector on the projector.

Accessing the service menu

CAUTION

- To prevent tampering or unintentional changes, only system administrators should access the service menu. Do not share the service menu access code with casual users of your interactive whiteboard system.
- Do not adjust any settings in the service menu other than those listed in this guide. Changing other settings can damage or affect the operation of your projector and may invalidate your warranty.

Retrieving your password

If you forget the projector's password, you can retrieve it by accessing the projector service menu directly from the projector or from the password settings menu on your projector's web page (see *Password settings* on page 55).

To retrieve your password from the service menu

1. Using the remote control, press the following buttons quickly to access the service menu: **Down**, **Up**, **Up**, **Left**, **Up**.
2. Scroll to *Password Get*, and then press **Enter** on the remote control.

   The password appears on the screen.

3. Write down the password.
4. Scroll to *Exit*, and then press **Enter** on the remote control to exit the projector service menu.

Resetting the projector

At some point during troubleshooting, you might need to reset all projector settings.

> **IMPORTANT**
> This action is irreversible.

To reset all projector settings

1. Using the remote control, press the following buttons quickly to access the service menu: **Down**, **Up**, **Up**, **Left**, **Up**.
2. Scroll to *Factory Reset*, and then press **Enter** on the remote control.
3. Scroll to *Exit*, and then press **Enter** on the remote control to exit the projector service menu.

Transporting your interactive whiteboard system

Save your original interactive whiteboard system packaging so that it's available if you need to transport your interactive whiteboard system. When required, repack it with all of the original packaging. This packaging was designed to provide optimal shock and vibration protection. If you no longer have your original packaging, purchase the same packaging directly from your authorized SMART reseller.

If you prefer to use your own packaging materials, make sure you adequately protect your unit. Make sure that the projector lens and mirror are protected against any physical contact or pressure which may damage the projector's optics. Ship your interactive whiteboard in an upright position to deter shippers from placing heavy objects on it.

Appendix A

Remotely managing your system through a network interface

Web page management 47
- Accessing web page management 48
- Home 48
- Control panel 48
- Control panel II 51
- Failurelog 52
- USB Control settings 52
- Network settings 52
- E-mail alerts 54
- Password settings 55

Simple Network Management Protocol (SNMP) 55
Crestron® RoomView® 55

This chapter includes detailed instructions on how to remotely manage your SMART Board interactive whiteboard system settings through a network interface.

Web page management

You can access advanced setup features via the projector's web page. This web page enables you to manage the projector from a remote location using any computer connected to your intranet.

NOTES

- To access the web page, your browser must support JavaScript. Most commonly used browsers like Internet Explorer®, Chrome™ and Firefox® support JavaScript.
- The SMART UX80 projector uses HTTP/1.1, HTML 4.01 and CSS 2.1 specifications.

Accessing web page management

Before you can access the web page, connect your projector to the network, and then enable the projector's network functions using the projector's menu. An IP address appears on the on-screen display.

NOTE

You can view the projector's IP address by accessing the projector's Network Settings menu page (see *Network settings* on page 52).

To use the management web page

1. Start your Internet browser.
2. Type the IP address in the address box, and then press ENTER.

   The *SMART UX80 Projector Settings* window appears.
3. Select the menu options in the left pane to access the settings on each page.
4. Modify settings using your computer's mouse and keyboard, and then click **Submit** or another action button next to each setting you change.

Home

The Home menu page displays basic projector information and enables you to select the on-screen display language.

NOTE

You can view basic projector information but you're unable to change it (with the exception of the on-screen display language) from the Home menu page.

Submenu setting	Description
Language	Displays language options
Projector Information	Displays current projector information

Control panel

This menu enables you to manage the projector audio and video status, alerts and appearance using an Internet browser.

NOTE

Image Adjustment settings displays only settings applicable to the active video source.

Submenu setting	Description
Power	Turns the projector on or puts it into Standby mode. Select the **Power ON** or **Power OFF** button.
Restore All Projector Defaults	Returns projector settings to default values or refreshes the current settings. Select **Submit** or **Refresh**. **IMPORTANT** The **Submit** option is irreversible and resets all values.
Volume	Adjusts the projector's volume from -20 to 20.
Mute	Turns on or turns off the mute settings. Select **On** to mute the projector's sound and **Off** to turn off mute.
Volume Control	Enables volume control on the on-screen display. Select **On** to enable projector volume adjustment and select **Off** to disable projector volume adjustment.
Closed Captioning	Turns on or turns off the closed captioning feature.
Display Mode	Adjusts the display output to **SMART Presentation**, **Bright Room**, **Dark Room**, **sRGB** and **User** modes so you can project images from various sources with consistent color performance: • **SMART Presentation** is recommended for color fidelity. • **Bright Room** and **Dark Room** are recommended for locations with those conditions. • **sRGB** provides standardized accurate color. • **User** enables you to apply your own settings.
Brightness	Adjusts projector brightness from 0 to 100.
Contrast	Adjusts the difference between the lightest and darkest parts of the image from 0 to 100.
Frequency	Adjusts the display data frequency of the projected image from -5 to 5 to match the frequency of your computer's graphics card.
Tracking	Synchronizes your projector's display timing with your computer's graphics card from 0 to 31.
Sharpness	Adjusts the projected image's sharpness from 0 to 31.
White Peaking	Adjusts the image color brightness from 0 to 10 while providing more vibrant white shades. A value closer to 0 creates a natural image and a value closer to 10 enhances brightness.
Degamma	Adjusts the color performance of the display from 0 to 3.
Color	Adjusts the Red, Green, Blue, Cyan, Magenta and Yellow colors on the projector from 0 to 100 to provide custom color and luminance output. Each color has a default value of 100. Adjustments to the color settings register to the User mode.

Submenu setting	Description
Auto Signal Detect	Enables or disables signal searching of input connectors. • Select **On** to have the projector continuously switch inputs until it finds an active video source. • Select **Off** to maintain signal detection in one input.
Lamp Reminder	Select **On** to show or **Off** to hide the lamp replacement reminder when it appears. This reminder appears 100 hours before the recommended lamp replacement.
Lamp Mode	Adjusts lamp brightness to **Standard** or **Economy**. **Standard** displays a high-quality, bright image. **Economy** increases the lamp life by decreasing the brightness of the image.
Auto Power Off	Sets the length of the auto power off countdown timer between 1 and 240 minutes. The timer begins to count down when the projector no longer receives a video signal. The timer finishes when the projector enters Standby mode. Select **0** to turn off the timer.
Zoom	Adjusts the zoom to the center of the image in or out from 0 to 30.
H-position (RGB input)	Moves the horizontal position of the source video left or right from 0 to 100 (relative to the projected image). **NOTE** This is useful in situations where the source video is cut off.
V-position (RGB input)	Moves the vertical position of the source video up or down from -5 to 5 (relative to the projected image). **NOTE** This is useful in situations where the source video is cut off.
Aspect Ratio	Adjusts the image output to **Fill Screen**, **Match Input** or **16:9**. • **Fill Screen** produces an image that fills the entire screen by stretching and scaling. • **Match Input** matches the projector's aspect ratio to the input's aspect ratio. As a result, black bands might appear along the top and bottom edges of the screen horizontally (letterbox format) or along the left and right edges of the screen vertically (pillarbox format). • **16:9** changes the output to 16:9 by letterboxing the image, which is recommended for use with HDTV and DVDs enhanced for wide-screen television. **NOTE** See *Video format* on page 81 for descriptions of each mode.

Submenu setting	Description
Startup Screen	Sets the type of startup screen to **SMART** or **User**. The **SMART** screen is the default SMART logo on a blue background. The **User** screen uses the saved picture from the Capture User Startup Screen function.
High Speed Fan	Adjusts the speed of the projector's fan. Select **High** or **Normal**. **NOTE** Use the High setting when the projector's temperature is high or the altitude is above 6000' (1800 m).
Projector Mode	Adjusts the projection mode to **Front**, **Ceiling**, **Rear** or **Rear Ceiling**. **IMPORTANT** SMART recommends that you never change this setting from the **Ceiling** projection mode.
Source	Adjusts the input source to **VGA**, **HDMI1** or **HDMI2**.
SMART Fixed Install (FI) / SMART Desktop mode (DT)	User-defined tag not currently used. Reserved for future application.
HDMI1	Assigns an alternative name to your HDMI1 input, which appears when you select the HDMI1 input.
HDMI2	Assigns an alternative name to your HDMI2 input, which appears when you select the HDMI2 input.
VGA1	Assigns an alternative name to your VGA 1 input, which appears when you select the VGA 1 input.
Emergency Alert	Turns the on-screen alert broadcast message on or off. When enabled, this message displays over the current projected image.
Alarm Message / Alert Message	Displays an on-screen emergency notification message (maximum 60 characters).

Control panel II

This menu enables you to manage the projector 3d feature settings.

Submenu setting	Description
USB1 Source	Associates the input source to **VGA**, **HDMI1** or **HDMI2**.
USB2 Source	Associates the input source to **VGA**, **HDMI1** or **HDMI2**.

Failurelog

This menu enables you to view projector service details such as lamp hours, display hours, temperature and lamp voltage on failure types such as lamp error and system overtemp.

Failurelog	Type	Lamp hours (hr.)	Display hours(hr.)	Temperature (□)	Lamp voltage (V)
1	Lamp Error	159	178	47	0
2	System Overtemp	3046	153	57	93
3	System Overtemp	3046	152	60	91
4	System Overtemp	146	152	57	100
5	Lamp Error	146	152	55	0

USB Control settings

This menu allows you to associate a video source with a USB receptacle on the ECP or pen tray.

Submenu setting	Description
USB1 Source	Enables touch for the selected video source (**VGA**, **HDMI1**, **HDMI2** or **Disabled**) by associating the video source with the room computer USB receptacle (USB1) on the ECP or pen tray.
USB2 Source	Enables touch for the selected video source (**VGA**, **HDMI1**, **HDMI2** or **Disabled**) by associating the video source with the laptop USB receptacle (USB2) on the ECP or pen tray.

Network settings

This menu allows you to use or not use Dynamic Host Control Protocol (DHCP) and to set the network-related addresses and names when DHCP isn't used.

Submenu setting	Description
DHCP	Determines if the projector's IP address and other network settings are dynamically assigned by a DHCP server or are manually set. • **On** allows the network's DHCP server to assign a dynamic IP address to the projector. • **Off** allows you to manually set the projector's IP address and other network settings.

Submenu setting	Description
IP Address	Displays or allows you to set the projector's IP address in values between 0.0.0.0 and 255.255.255.255.
Subnet Mask	Displays or allows you to set the projector's subnet mask number in values between 0.0.0.0 and 255.255.255.255.
Gateway	Displays or allows you to set the projector's default network gateway in values between 0.0.0.0 and 255.255.255.255.
DNS	Displays or allows you to set the projector's IP address for your network's primary domain name server in values between 0.0.0.0 and 255.255.255.255.
Group Name	Displays or allows you to set the projector's workgroup name (maximum 12 characters).
Projector Name	Displays or allows you to set the projector's name (maximum 12 characters).
Location	Displays or allows you to set the projector's location (maximum 16 characters).
Contact	Displays or allows you to set the contact name or number for projector support (maximum 16 characters).
SNMP Enable	Turns the Simple Network Management Protocol (SNMP) agent on or off.
Read-Only Community	Sets a password that is required for each SNMP get request to the device. **NOTE** The default for Read-Only Community is public.
Read/Write Community	Sets a password that is required for each SNMP set request to the device. **NOTE** The default for Read/Write Community is private.
TRAP Destination Address	Displays or allows you to set the IP address of the network's SNMP TRAP manager in values between 0.0.0.0 and 255.255.255.255. The TRAP destination address is the IP address of the computer assigned to handle unsolicited data generated by SNMP TRAP events generated by the projector, such as power state changes, projector failure modes, a lamp needing to be replaced or other issues.

E-mail alerts

This menu enables you to enter your preferred address for receiving e-mail alerts and to adjust related settings.

Submenu setting	Description
E-mail Alert	Select **Enable** to turn on or **Disable** to turn off the e-mail alert function.
To	Displays or allows you to set the e-mail address of the e-mail alert recipient.
CC	Displays or allows you to set the e-mail address of the e-mail alert “copy to” recipient.
From	Displays or allows you to set the e-mail address of the user who sends the e-mail alert.
Outgoing SMTP server	Displays or allows you to set the Simple Mail Transfer Protocol (SMTP) server that you use on your network.
Username	Displays or allows you to set the SMTP server user name.
Password	Displays or allows you to set the SMTP server password.
Alert Condition	Sends e-mail alerts whenever the following conditions occur. Select the settings you want, and then click **Submit**. • Over Temperature • Fan Failure: DMD • Fan Failure: System • Fan Failure: Blower • Lamp Error • Color Wheel Break • Lamp Ignite Error • Lamp Driver Failure • Lamp Over Hours **NOTE** The projector sends an alert e-mail (SMART Alert) to your e-mail address. Click **E-mail Alert Test** to confirm that your e-mail address and SMTP server settings are correct by sending a test e-mail (SMART Alert-Test Mail). If the settings aren’t correct, the e-mail alert messages aren’t sent or received successfully and warnings and notification message aren’t available to advise of this state.

Password settings

This menu provides a security function that allows an administrator to manage projector use and enable the administrator password function.

Submenu setting	Description
Password	When the password function is enabled, the administrator password is required to access Web Management. Select **Disable** to allow remote web management of the projector without requiring a password.

NOTES

- The first time you enable the password settings, the default password value is four numbers, for example, 1234.
- If you forget the projector password, refer to *Accessing the service menu* on page 45 to set the projector setting to factory defaults.

Simple Network Management Protocol (SNMP)

Your projector supports a list of SNMP commands as described in the management information base (MIB) file. You can download this file by browsing to smarttech.com/software and clicking the MIB file's link in the *Hardware* section for the projector.

The SNMP agent in your projector supports SNMP version 1 or 2. Upload the MIB file to your SNMP management system application, and then use it as described in your application's user guide.

Crestron® RoomView®

Crestron RoomView Express management software is embedded in the SMART UX80 projector to deliver built-in direct connectivity and control via the IT network. There are no control processors or custom programming is required; just connect the SMART UX80 projector to your network and Crestron RoomView immediately recognizes the device for seamless communication and control.

RoomView Connected® devices also feature built-in instant help-desk messaging and emergency broadcasting to provide the safest, most secure classroom environment so teachers have the confidence to focus on teaching.

Appendix B

Remotely managing your system through an RS-232 serial interface

Connecting your room control system to the SMART UX80 projector 58
- Pin configuration on the projector's RS-232 connector 58
- Serial interface settings 58

Projector programming commands 60
- Projector power state controls 60
- Power state controls 62
- Display controls 63
- Audio controls 64
- System controls 65
- Service and support controls 67
- Network controls 69
- Advanced display controls 71

This appendix includes detailed instructions on how to set up your computer or room control system to remotely manage your SMART Board interactive whiteboard system settings through an RS-232 serial interface.

Connecting your room control system to the SMART UX80 projector

By connecting a computer or room control system to the RS-232 serial interface of the SMART UX80 projector, you can select video inputs, start up or shut down your interactive whiteboard system and request information such as projector lamp use, current settings and network addresses.

Pin configuration on the projector's RS-232 connector

The following table provides the pin configuration on the SMART UX80 projector. This pin configuration follows a three-wire connection so that a straight-through male-to-female RS-232 serial cable connects to the projector's serial interface in the following arrangement:

Pin number	Projector's female RS-232 connector
2	Receive data (Rx)
3	Transmit data (Tx)
5	Signal Ground (GND)

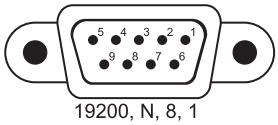

19200, N, 8, 1

Serial interface settings

To be able to make use of the projector's control port, your computer equipment or room control system must be configured to match these serial data communications settings.

Setting	Value
Data Rate	19.2 kbps
Data Bits	8
Parity	None
Stop Bits	1
Flow Control	None

NOTES

- Asynchronous mode is disabled by default in the projector.
- All commands should be in ASCII format. Terminate all commands with a carriage return.

- All responses from the projector are terminated with a command prompt. Wait until you receive the command prompt indicating that the system is ready for another command before you continue.
- The room control feature of the projector is always on.

To configure your computer's serial interface

1. Turn on your computer, and then start your serial communications program or terminal emulation program.
2. Connect your computer to the serial connection cable connected to the projector.
3. Configure your serial interface settings using the values in the previous table, and then press ENTER.

   The > character appears as a command prompt.

   NOTE

   If no message appears or an error message appears, your serial interface configuration isn't correct. Repeat step 3.

4. Type commands to configure your settings.

   NOTES

   - To see a list of commands available in the current operating mode, type **?** and then press ENTER.
   - If you're using a terminal emulation program, turn on your program's local echo setting to see characters as you type them.

Projector programming commands

This section documents the projector programming commands and responses.

Projector power state controls

Your projector responds to commands only at certain power states and times.

There are six projector power states.

Command	Control basics
?	Commands the projector to output a list of commands that are available in the projector's current operating mode. Note that some available commands might not appear in the resulting list.
on	Commands the projector to exit Standby mode, to ignite the lamp and to begin projecting an image.
off	Commands the projector to stop projecting an image, to cool down the lamp and to enter Standby mode. The projector doesn't do this immediately; instead, it responds with a request for confirmation, which must be followed by a second "off" command within 10 seconds.
off now	Commands the projector to immediately stop projecting an image, to cool down the lamp and to enter Standby mode without requiring any further confirmation.
get [parameter]	Commands the projector to allow you to retrieve information from the projector about the current state of one of the projector's operating parameters.
set [parameter] = [value]	Commands the projector to allow you to change the current state of one of the projector's operating parameters. For numeric values, the "set" command can also use a plus (+) or a minus (-) operator, in addition to an equals (=) operator. **NOTES** • Attempts to set a parameter to an invalid value return an "invalid command" response. • For parameters that use numeric values, attempts to set the value outside of its operating range result in setting the parameter to its maximum or minimum value.

NOTES

- If you send the projector an invalid command, you receive an “invalidcmd=[the command sent]” message from the projector.
- Projector operating parameters that are accessible via the “set” or “get” commands are listed in the following sections.

Power state controls

These commands put the projector in and out of Standby mode and request the projector's current power state. The projector's power state determines whether certain commands are available at that time. These settings are available even when the projector is in Standby mode.

Usable command by power state		Property	Valid values	Notes
Standby / idle	On			
get	get	powerstate	• on • off • confirm off • powering • cooling • idle	These states may be reported asynchronously, preceded by a # character, if the projector's "statereporting" function is enabled.
set or get	set or get	statereporting	• on • off (default)	Causes the projector power state to be reported asynchronously, without a need to get it first.

Display controls

These commands control the video display of the projector.

Usable command by power state		Property	Valid values	Notes
Standby / idle	On			
get	get	videoinputs	Returns a text list of available video source inputs, such as VGA#, HDMI#, Composite.	The default SMART UX80 projector with no accessories will return a list of VGA1, HDMI1, HDMI2.
get	set or get	input	• VGA# [# range of 1~5] • HDMI# [# range of 1~5] • Composite • None • Next (settable only, not gettable)	A default SMART UX80 projector with no additional accessories has VGA1, HDMI1 and HDMI2 only.
	set or get	autosignal	• on • off (default)	Causes the projector to automatically rotate through all available video inputs until a valid video source signal is found.
	set or get	signaldetected	• true • false	Indicates if an active source video signal is detected by the projector.
	set or get	displayhide	• normal (default) • frozen • muted	
	set or get	videomute	• on • off (default)	
	set or get	videofreeze	• on • off (default)	
	set or get	autopoweroff	• on • off (default)	

Audio controls

These commands control the audio of the projector.

Usable command by power state		Property	Valid values	Notes
Standby / idle	On			
	set or get	volumecontrol	• on • off (default)	When off, prevents a user from changing the projector amplifier volume via the remote control or any attached control panel.
	set or get	volume	Numeric value. Range: -20~20 (default = 0)	This may be displayed to the user as a range of 0~40 in the projector's on-screen display.
	set or get	mute	• on • off (default)	
	set or get	sysoutputsw	• line • spkr • line+spkr (default)	Chooses where to route the audio output signal to the internal speaker, to the external audio system (via the line out connector) or both.

System controls

These commands control the integration properties of the projector.

Usable command by power state		Property	Valid values	Notes
Standby / idle	On			
set or get	set or get	usb1source	•VGA# [# range of 1~5] • HDMI# [# range of 1~5] (default = vga1)	A default SMART UX80 projector with no additional accessories has VGA1, HDMI1 and HDMI2 only.
set or get	set or get	usb2source	• VGA# [# range of 1~5] • HDMI# [# range of 1~5] (default = hdmi1)	A default SMART UX80 projector with no additional accessories has VGA1, HDMI1 and HDMI2 only.
	set or get	emergencyalertmsg	[text string] (41 character maximum)	Contains text to be displayed when the “emergencyalert” function is turned on.
	set or get	emergencyalert	• on • off (default)	This will cause the “emergencyalermessaget” to be displayed on the projector instead of the normal image.
	set or get	language	Arabic, Czech, German, Danish, Greek, English (default), Spanish, Finnish, French, Korean, Norwegian, Swedish, Italian, Japanese, Simplified Chinese, Polish, Traditional Chinese, Dutch, Iberi, Portuguese, Russian	• Matches the languages listed in the projector on-screen display’s *language* menu. • Languages with spaces in the name must be entered without the spaces.
	set or get	lampreminder	• on • off (default)	Provides a reminder when it’s time to change the projector lamp.

Usable command by power state		Property	Valid values	Notes
Standby / idle	On			
	set or get	startupscreen	• smart (default) • usercapture • preview	Chooses what splash screen to display at projector startup or when there is no active video source signal.

Service and support controls

These commands control the integration properties of the projector.

Usable command by power state		Property	Valid values	Notes
Standby / idle	On			
	get	modelnum	[model name text string]	The projector's model.
	get	prjserialnum	B01#??##?#### (13-digits, # is any number, ? is any letter)	The projector's serial number.
get	get	fwverddp	#.#.#.#	Firmware version for the projector's digital display processor.
get	get	fwvermpu	#.#.#.#	Firmware version for the projector's microprocessor unit.
get	get	fwvernet	#.#.#.#	Firmware version for the projector's network module. If the network module is disabled, this will report as 0.0.0.0.
get	get	fwverecp	#.#.#.#	Firmware version for the attached ECP (extended control panel). If no ECP is attached to the projector, this will be 0.0.0.0.
set or get	set or get	lamphrs	0~5000	Current record of the age of the projector lamp in usage hours.
get	get	syshrs	0~20000	Current record of the age of the projector in usage hours.
	get	displayhour	0~20000	Current record of the age of the projector in usage hours.

Usable command by power state		Property	Valid values	Notes
Standby / idle	On			
	get	resolution	last known video input resolution in the format of ###x###@##Hz or ###i/p	
	set or get	highspeedfan	• high • normal (default)	Enables the high speed fan in hot environments to prevent overheating.
get	get	failurelog	Returns a text list of failures detected by the projector and logged in the projector's failure log (or an indication of “normal”). This is in the format of failure1, failure2, failure3, etc.	Failures detectable by the projector include the following: overtemp, fanlock, fanDMD, fanblower, fansystem, lamperror, colorwheelbreak, lampignite, lampoverheat, lampdriver, lampoverhours
get	gett	error#	Returns text information about the specified error number in the projector’s error log.	Reported data: Error type, lamp hours, system hours, system temperature, and lamp voltage when the error was detected.
set	set	restoredefaults		This immediately reset the projector operating parameters to their factory default settings. A hard power-cycle may be required to complete.
set	set	factoryreset	• true • false	Setting this to “true” resets the projector operating parameters to their factory default settings. A hard power-cycle may be required to complete.

Network controls

These commands control the integration properties of the projector.

Usable command by power state		Property	Valid values	Notes
Standby / idle	On			
	set or get	network	• on • off (default)	Enables or disables the network module.
set or get	set or get	vgaoutnetenable	• on • off (default)	Same function as the “network” property.
get	get	netstatus	• connected • disconnected • disabled	Reports if the network port on the projector is or isn’t connected to a network.
set or get	set or get	dhcp	• on • off (default)	When off, the projector's network IP address, subnetmask, gateway and primary DNS values must all be set manually.
set or get	set or get	ipaddr	A valid IPv4 address in values between 0.0.0.0 and 255.255.255.255	An IPv4 address.
set or get	set or get	subnetmask	A valid IPv4 address in values between 0.0.0.0 and 255.255.255.255	An IPv4 address.
set or get	set or get	gateway	A valid IPv4 address in values between 0.0.0.0 and 255.255.255.255	An IPv4 address.
set or get	set or get	primarydns	A valid IPv4 address in values between 0.0.0.0 and 255.255.255.255	An IPv4 address.
get	set or get	macaddr	xx-xx-xx-xx-xx-xx]	The media access control (MAC) identifier of the projector’s network module.

Usable command by power state		Property	Valid values	Notes
Standby / idle	On			
	set or get	groupname	[text string]	These properties aren't used by any of the projector functions. They exist only for human reference, if desired.
	set or get	projectorname	[text string]	
	set or get	locationinfo	[text string]	
	set or get	contactinfo	[text string]	
	set or get	projectorid	Numeric value between 0 and 99	

Advanced display controls

These commands control the integration properties of the projector.

Usable command by power state		Property	Valid values	Notes
Standby / idle	On			
	set or get	projectionmode	• front • ceiling (default) • rear • rear ceiling	
	set or get	displaymode	• SMARTPresentation (default) • Brightroom • Darkroom • sRGB • User	
	set or get	highbrightness	• on (default) • off	
	get	nativeaspectratio	• 16:9 • 16:10	• UX80 reports 16:10 • UX80HD reports 16:9
	set or get	aspectratio	• fill (default) • match • 16:9	
	set or get	brightness	Numeric value. Range: 0~100	Default=50
	set or get	contrast	Numeric value. Range: 0~100	Default=50
	set or get	frequency	Numeric value. Range: -5~5	Automatically detected from current video source.
	set or get	tracking	Numeric value. Range: 0~31	Automatically detected from current video source.
	set or get	hposition	Numeric value. Range: 0~100	Automatically detected from current video source.

Usable command by power state		Property	Valid values	Notes
Standby / idle	On			
	set or get	vposition	Numeric value. Range: -5~5	Automatically detected from current video source.
	set or get	whitepeaking	Numeric value. Range: 0~10	Default=10
	set or get	degamma	Numeric value. Range: 0~3	Default=2
	set or get	red	Numeric value. Range: 0~100	Default=100
	set or get	green	Numeric value. Range: 0~100	Default=100
	set or get	blue	Numeric value. Range: 0~100	Default=100
	set or get	cyan	Numeric value. Range: 0~100	Default=100
	set or get	magenta	Numeric value. Range: 0~100	Default=100
	set or get	yellow	Numeric value. Range: 0~100	Default=100
	set or get	zoom	Numeric value. Range: 0~30	Default=0

Adjusting projector settings

The remote control's Menu button enables you to access the on-screen display to adjust the projector settings.

IMPORTANT

Keep your remote control in a safe place because there is no other way to access menu options.

Setting	Use	Notes
Image Adjustment menu		
Display Mode	Indicates the projector's display output (**SMART Presentation**, **Bright Room**, **Dark Room**, **sRGB** and **User**).	The default is **SMART Presentation**.
Brightness	Adjusts projector brightness from 0 to 100.	The default is 50.
Contrast	Adjusts the difference between the lightest and darkest parts of the image from 0 to 100.	The default is 50.
Frequency	Adjusts the display data frequency of the projected image from -5 to 5 to match the frequency of your computer's graphics card.	The default is 0. This setting applies to VGA inputs only.
Tracking	Synchronizes your projector's display timing with your computer's graphics card from 0 to 63.	This setting applies to VGA inputs only.
H-Position	Moves the horizontal position of the source video left or right from 0 to 100 (relative to the projected image).	Don't adjust this setting unless you're advised to by SMART Support. Apply this setting only after you make all boom adjustments. This setting applies to VGA inputs only and is useful in situations where the source video is cut off.

Setting	Use	Notes
V-Position	Moves the vertical position of the source video up or down from -5 to 5 (relative to the projected image).	Don't adjust this setting unless you're advised to by SMART Support. Apply this setting only after you make all boom adjustments. This setting applies to VGA inputs only and is useful in situations where the source video is cut off.
White Peaking	Adjusts the image color brightness from 0 to 10 while providing more vibrant white shades.	A value closer to 0 creates a natural image and a value closer to 10 enhances brightness. The default is 10.
Degamma	Adjusts the color performance of the display from 1 to 3.	The default is 2.
Color	Adjusts the Red, Green, Blue, Cyan, Magenta and Yellow colors on the projector from 0 to 100 to provide custom color and luminance output.	Each color has a default value of 100. Adjustments to the color settings register under the User mode.
Audio menu		
Volume	Adjusts the projector's volume amplification from -20 to 20.	The default is 0.
Mute	Mutes the projector's audio output.	The default is off. If you mute the projector's audio output and then increase or decrease the volume, the volume is restored automatically. You can prevent this from happening by disabling the volume control.
Disable Volume Control	Disables the projector's volume control and the ECP's volume control knob.	
System Output	Selects one or more speakers or other audio device.	Select **Line Out+Speaker**, **Line Out Only** or **Speaker Only**.
Projector Functions menu		
3D On/Off	Turns the DLP Link technology 3D feature on or off.	The default is off.

Setting	Use	Notes
3D Format	Displays the current 3D format (**Interleaved** or **Under-over**).	**Interleaved** breaks down the image frame for each eye, alternately displaying a line of visual information from each frame. **Under-over** concurrently displays horizontally stretched image frames for each eye, one above the other.
3D Invert Left-Right	Selects the 3D Invert setting (**L-R** or **R-L**).	**L-R** displays visual data for the left eye first. **R-L** displays visual data for the right eye first.
Auto Signal Detect	Enables or disables signal searching of input connectors.	The default is off. Select **On** to have the projector continuously switch inputs until it finds an active video source. Select **Off** to maintain signal detection in one input.
Lamp Reminder	Turns the lamp replacement reminder on or off.	This reminder appears 100 hours before the recommended lamp replacement.
Lamp Mode	Adjusts lamp brightness to **Standard** or **Economy**.	**Standard** displays a high-quality, bright image. **Economy** increases the lamp life by decreasing the brightness of the image.
Auto Power Off (minutes)	Sets the length of the auto power-off countdown timer between 1 and 240 minutes.	The default is 120 minutes. The timer begins to count down when the projector no longer receives a video signal. The timer finishes when the projector enters Standby mode. Select **0** to turn off the timer.
Zoom	Adjusts the zoom to the center of the image in or out from 0 to 30.	The default is 0. Zooming in cuts off the outer edges of the source video.
USB 1 source	Enables touch for the selected video source VGA out,USB 2 will disabled by associating the video source with the room computer USB receptacle (USB1) on the ECP.	The default is VGA out. When the user switches to the video source the interactive whiteboard recognizes touch from the device connected to the room computer USB receptacle on the ECP. Selecting Disabled disables the room computer USB receptacle on the ECP.

Setting	Use	Notes
USB 2 source	Enables touch for the selected video source HDMI, USB 1 will be disabled by associating the video source with the guest computer USB receptacle (USB2) on the ECP.	The default is HDMI. When the user switches to the video source the interactive whiteboard recognizes touch from the device connected to the guest computer USB receptacle on the ECP. Selecting Disabled disables the room computer USB receptacle on the ECP.
Projector ID	Displays the projector's unique ID number (from 0 to 99) within your organization's network.	You can refer to or change this number when using the network remote management feature (see *Remotely managing your system through a network interface* on page 47).
Aspect Ratio	Adjusts the image output to **Fill Screen**, **Match Input** or **16:9**.	The default is **Fill Screen**. **Fill Screen** produces an image that fills the entire screen by stretching and scaling the source video to match the projector's native resolution and aspect ratio. **Match Input** displays the source video in its native resolution and aspect ratio. As a result, unused space could appear along the top and bottom edges of the screen (letterbox format) or along the left and right edges of the screen (pillarbox format). See *Video format* on page 81 for descriptions of each mode.
Startup Screen	Selects the type of startup screen (**SMART**, **Capture User Startup Screen**, **Preview Startup Screen**), or Image Alignment Screen.	This screen displays when the projector lamp is starting and a video source signal isn't displayed. **SMART** displays the default SMART logo on a blue background. **Capture User Startup Screen** closes the on-screen display menu and captures the entire projected image. The captured image is displayed the next time the on-screen display opens. (The capture can take up to one minute, depending on the complexity of the background graphic.) **Preview Startup Screen** enables you to preview the default or captured startup screen. **Image Alignment Screen** enables you to adjust the projected image size, shape and location.

Setting	Use	Notes
Image Alignment Screen	Enables you to adjust the projected image size, shape and location.	The image alignment screen appears the first time you start your projector. However, you can access it from the startup screen menu any time. Press **Menu** or **Enter** to close it.
Set to Default?	Resets projector settings to their default values.	If you select **Yes**, all projector settings reset to their defaults, reversing any menu changes you made. This action is irreversible. Don't adjust this setting unless you want to reset all of the applied settings, or unless you're advised to by a SMART Support specialist.
USB Source Select	Opens a sub-menu that enables you to select the video input on your projector and the USB receptacle on the ECP.	The defaults are: • HDMI-1, USB 1 • HDMI-2, Disabled (no associated USB input) • VGA-1, USB 2
Network menu		
Network	Activates the projector's RJ45 connector and network features.	
Status	Displays the current network status (**Connected**, **Disconnected** or **Off**).	The default is off.
DHCP	Displays the status of the network's Dynamic Host Configuration Protocol (DHCP) as **On** or **Off**.	The default is on. **On** enables a DHCP server on the network to automatically assign an IP address to the projector. **Off** enables an administrator to assign an IP address manually.
Password Reminder	E-mails the network password to the predefined e-mail recipient.	See *Web page management* on page 47 to set up a destination e-mail address.

Setting	Use	Notes
IP Address	Displays the projector's current IP address in values between 0.0.0.0 and 255.255.255.255.	To change the projector's IP address, use the RS-232 connector or use a DHCP server to assign a dynamic IP address, and then set a static IP address using the network remote management feature (see *Remotely managing your system through a network interface* on page 47).
Subnet Mask	Displays the projector's subnet mask number in values between 0.0.0.0 and 255.255.255.255.	
Gateway	Displays the projector's default network gateway in values between 0.0.0.0 and 255.255.255.255.	
DNS	Displays the projector's primary domain name server (DNS) IP address in values between 0.0.0.0 and 255.255.255.255.	
MAC Address	Displays the projector's MAC address in xx-xx-xx-xx-xx-xx format.	
Group Name	Displays the projector's workgroup name as set by an administrator (maximum 12 characters).	You can set the projector's workgroup name using the remote management features (see *Remotely managing your system through a network interface* on page 47 and *Remotely managing your system through an RS-232 serial interface* on page 57).
Projector Name	Displays the projector's name as set by an administrator (maximum 12 characters).	You can set the projector's name using the remote management features (see *Remotely managing your system through a network interface* on page 47 and *Remotely managing your system through an RS-232 serial interface* on page 57).
Location	Displays the projector's location as set by an administrator (maximum 16 characters).	You can set the projector's location using the remote management features (see *Remotely managing your system through a network interface* on page 47 and *Remotely managing your system through an RS-232 serial interface* on page 57).

Setting	Use	Notes
Contact	Displays the contact name or number for projector support as set by an administrator (maximum 16 characters).	You can set the contact name or number using the remote management features (see *Remotely managing your system through a network interface* on page 47 and *Remotely managing your system through an RS-232 serial interface* on page 57).
Language menu		
Language	Selects language preference.	Projector menu support is available in English (default), Chinese (Simplified), Chinese (Traditional), Czech, Danish, Dutch, Finnish, French, German, Greek, Italian, Japanese, Korean, Norwegian, Polish, Portuguese (Brazil), Portuguese (Portugal), Russian, Spanish and Swedish.
Information menu		
Lamp Hours	Displays the current number of lamp usage hours from 0 to 4000 hours from when it was last reset.	Always reset the lamp hours after you replace a lamp, because lamp service reminders are based on the current hours of use. See *Resetting the lamp hours* on page 29 for details on the lamp hours reset procedure.
Input	Displays the currently displayed video input source (**VGA**, **HDMI1**, **HDMI2** or **None**).	
Resolution	Displays the projector's most recently detected video source signal resolution and refresh rate.	If there is no current video input source signal, this setting displays the last known source signal image resolution and refresh rate.
Firmware Version	Displays the projector's digital display processor (DDP) firmware version in x.x.x.x format.	
MPU Version	Displays the projector microprocessor unit (MPU) firmware version in x.x.x.x format.	

Setting	Use	Notes
Network Version	Displays the projector's network communications processor firmware version in x.x.x.x format.	If you haven't enabled the **Network and VGA Out** setting, this setting is unable to display the projector's network communications processor firmware version and displays 0.0.0.0 instead.
Model Number	Displays the projector's model number.	
Serial Number	Displays the projector's serial number.	
UCP ports 1 / 2	Reserved for future application.	

Appendix C

Integrating other devices

Video format 81
Native video format 81
Video format compatibility 82
HD and SD signal format compatibility 83
Video system signal compatibility 84
Connecting peripheral sources and outputs 84

This appendix provides information on integrating your SMART Board interactive whiteboard system with peripheral devices.

Video format

Your projector has a native video format and various video format compatibility modes. You can change image appearances for certain formats and compatibilities.

Native video format

The following table lists the native VESA RGB video format and digital HDMI video format for the projector.

Resolution	Mode	Aspect ratio	Refresh rate (Hz)	Horizontal frequency (kHz)	Pixel clock (MHz)
1280 × 800	WXGA	16:10	60	48	83.5

Video format compatibility

The following tables list the projector's compatible VESA RGB video formats by resolution, which you can adjust by using the aspect ratio commands described in *Adjusting projector settings* on page 73.

Resolution	Mode	Aspect ratio	Refresh rate (Hz)	"Match Input" appearance
720 × 400	720×400_85	1.8:1	85.039	Pillarbox
640 × 480	VGA 60	4:3	59.94	Pillarbox
640 × 480	VGA 72	4:3	72.809	Pillarbox
640 × 480	VGA 75	4:3	75	Pillarbox
640 × 480	VGA 85	4:3	85.008	Pillarbox
800 × 600	SVGA 56	4:3	56.25	Pillarbox
800 × 600	SVGA 60	4:3	60.317	Pillarbox
800 × 600	SVGA 72	4:3	72.188	Pillarbox
800 × 600	SVGA75	4:3	75	Pillarbox
800 × 600	SVGA 85	4:3	85.061	Pillarbox
832 × 624	MAC 16"	4:3	74.55	Pillarbox
1024 × 768	XGA 60	4:3	60.004	Pillarbox
1024 × 768	XGA 70	4:3	70.069	Pillarbox
1024 × 768	XGA 75	4:3	75.029	Pillarbox
1024 × 768	XGA 85	4:3	84.997	Pillarbox
1024 × 768	MAC 19"	4:3	74.7	Pillarbox
1152 × 864	SXGA175	4:3	75	Pillarbox
1280 × 768	SXGA175	1.67:1	60	Letterbox
1280 × 800	WXGA	16:10	60	Native
1280 × 960	Quad VGA 60	4:3	60	Pillarbox
1280 × 960	Quad VGA 85	4:3	85.002	Pillarbox
1280 × 1024	SXGA3 60	5:4	60.02	Pillarbox
1280 × 1024	SXGA3 75	5:4	75.025	Pillarbox

Resolution	Mode	Aspect ratio	Refresh rate (Hz)	"Match Input" appearance
1280 × 1024	SXGA3 85	5:4	85.024	Pillarbox
1400 × 1050	SXGA+	4:3	59.978	Pillarbox
1600 × 1200	UXGA	4:3	60	Pillarbox
1680 × 1050	WSXGA+	16:10	60	Native
1920 × 1080	HD 1080	16:9	60	Letterbox

HD and SD signal format compatibility

The following tables list the projector's high definition and standard definition format signal compatibility, which you can adjust by using the aspect ratio commands described in *Adjusting projector settings* on page 73.

Signal format	Aspect ratio	Horizontal frequency (kHz)	Vertical frequency (Hz)	"Match Input" appearance
480i (525i)	4:3	15.73	59.94	Full screen
480p (525p)	4:3	31.47	59.94	Full screen
576i (625i)	5:4	15.63	50	Pillarbox
576p (625p)	5:4	31.25	50	Pillarbox
720p (750p)	16:9	45	59.94	Letterbox
720p (750p)	16:9	37.5	50	Letterbox
1080i (1125i)	16:9	33.75	59.94	Letterbox
1080i (1125i)	16:9	28.13	50	Letterbox
1080p (1125p)	16:9	67.5	59.94	Letterbox
1080p (1125p)	16:9	56.25	50	Letterbox

NOTE

Your projector is HD-ready. Its native resolution supports a pixel-perfect display of 720p source content. However, because the projector compresses 1080p source content to fit its native resolution, it doesn't support a pixel-perfect display of 1080p source content.

Video system signal compatibility

The following tables list the projector's video system signal compatibility delivered over HDMI video connectors, which you can adjust by using the aspect ratio commands described in *Adjusting projector settings* on page 73.

Video mode	Aspect ratio	Vertical frequency (Hz)
720p	16:9	59.94
720p	16:9	50
1080i	16:9	50
1080p	16:9	50.94
1080p	16:9	50
576i	5:4	50
480i	4:3	50.94

Connecting peripheral sources and outputs

Follow these instructions if you have a peripheral device to connect to your interactive whiteboard system, such as a DVD/Blu-ray player or a USB device.

NOTES

- Measure the distance between the projector and the peripheral device you want to connect. Make sure each cable is long enough, has plenty of slack and can be placed safely in your room without presenting a trip hazard.
- Do not disconnect cables from the ECP to connect peripheral devices because you could disconnect controls for your interactive whiteboard.
- The RCA jacks on the ECP aren't used in this configuration and aren't enabled.

To connect a laptop to a SMART Board interactive whiteboard system

1. Connect a USB cable from the laptop to the appropriate USB port on the ECP.
2. Connect a VGA cable from the laptop to the projector.

   OR

   Connect an HDMI cable from the laptop to the projector.
3. Press the **Input** button on the ECP or remote control to switch input sources to the laptop.

To connect a DVD/Blu-ray player or similar device

1. If you have speakers installed, turn the volume dial on the ECP all the way down to prevent buzzing or popping.
2. Press the **Input** button on the ECP or remote control to switch input sources to the peripheral device.
3. Restore the volume on the ECP's volume dial.

NOTE

HDMI inputs are High Definition Content Protection (HDCP) compliant.

The SMART UX80 projector allows synchronization between two adjacent systems. The two projectors can be connected with a Cat 5 crossover cable to allow the control of the power states through a single ECP, through the remote control or through a room control system.

To connect a second projector

Connect a Cat 5 crossover cable to the Projector 2 port of the primary SMART UX80 projector and into the Projector 2 port of the secondary SMART UX80 projector.

NOTE

The Projector 2 ports only synchronize power states and don't carry audio or video.

Appendix D

Remote control code definitions

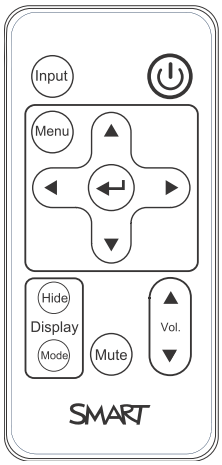

IR signal format: NEC1

Key	Repeat format	Vendor code		Key code	
		Byte 1	Byte 2	Byte 3	Byte 4
Input	F1	8B	CA	14	EB
Power (⏻)	F1	8B	CA	12	ED
Menu	F1	8B	CA	1B	E4
Up (▲)	F1	8B	CA	40	BF
Left (◀)	F1	8B	CA	42	BD
Enter (↵)	F1	8B	CA	13	EC
Right (▶)	F1	8B	CA	43	BC
Down (▼)	F1	8B	CA	41	BE
Hide	F1	8B	CA	15	EA
Volume up (▲)	F1	8B	CA	44	BB
Mode	F1	8B	CA	45	BA
Mute	F1	8B	CA	11	EE
Volume down (▼)	F1	8B	CA	46	B9

Appendix E

Hardware environmental compliance

SMART Technologies supports global efforts to ensure that electronic equipment is manufactured, sold and disposed of in a safe and environmentally friendly manner.

Waste Electrical and Electronic Equipment and Battery regulations (WEEE and Battery Directives)

Electrical and electronic equipment and batteries contain substances that can be harmful to the environment and to human health. The crossed-out wheeled bin symbol indicates that products should be disposed of in the appropriate recycling stream and not as regular waste.

Batteries

Remote contains CR2025 battery. Recycle or dispose of batteries properly.

Perchlorate material

Contains perchlorate material. Special handling may apply. See dtsc.ca.gov/hazardouswaste/perchlorate.

Mercury

The lamp in this product contains mercury and must be recycled or disposed in accordance with local, state, provincial and federal laws.

More information

See smarttech.com/compliance for more information.

Index

3

3.5 mm audio connectors 11

A

accessories
  included 5
alarms 51
aspect ratios 3, 18, 50, 76, 81-84
audio 64
  controlling volume of 23, 49
  muting 14
  resolving issues with 43

B

batteries 30, 89
Blu-ray players 85

C

closed captioning 49
connection diagrams
  ECP 23
  projector 10
contact person 53

D

DHCP 19, 52, 77
display modes 14-15, 49, 73
DNS 53
document cameras 84
dust iv
DVD players 85

E

e-mail alerts 54
ECP
  about 4
  lights and status of 45
  using 22
electrostatic discharge iv
emergency alerts 51
emissions v
environmental requirements iv
eraser 5

F

fans 38, 51
flickering 41
focus 9

H

HD signal compatibility 83
HDMI connections 11, 51
head space clearance 8
height 8
Help button 22
humidity iv

I

image
  adjusting 9
  focusing 9
  resolving issues with 40

image alignment screen 9
input selection 23, 51
installation
    choosing a height 8
    choosing a location 7
interactive whiteboard
    about 2
    indicators and controls of 36
    maintaining 25
    using 22
IP address 20, 48, 53, 78

L

lamp module
    cleaning 27
    resolving issues with 39
laptop computers
    connecting 84
    troubleshooting issues with 42
letterboxing 82-83
light sources 7
location 7, 53

M

MAC support 82
mercury 89
mounting template 8
mute control 14, 16, 49, 74

N

native video formats 81
network communication 11, 44, 52

O

original packaging 46

P

passwords 19, 45, 54-55, 77
pen tray
    about 2
    locking to the interactive whiteboard 12
pens 5
Perchlorate material 89
peripheral sources 84
pillarboxing 82-83
power 11, 23, 49, 60, 62-63, 65, 67, 69, 71
projector
    about 3
    adjusting settings for 15, 73
    adjusting the image of 9
    cleaning 27
    connection diagram for 10
    displaying the name of 53
    focusing the image of 9
    installing 7
    lights and status of 32
    locating the serial number on 33
    remotely managing 47, 57
    routing cables from 8, 12
    troubleshooting 37
    using your remote control with 13
    video format compatibility for 81

Q

quad VGA support 82

R

RCA jacks 23
refresh rates 81-82
remote control
    about 5
    code definitions for 87
    installing the battery 30
    using the buttons 14
RJ45 connector 11

room control 47, 57
RS-232 serial interface 11, 58

S

SD signal compatibility 83
serial interface See RS-232 serial interface
serial number 33
signal loss 40
SMART Board interactive
    whiteboard See interactive
    whiteboard
SMART UX80 projector See projector
SMTP 54
SNMP 53, 55
sound See audio
startup screen 51
subnet mask 20, 53, 78
SVGA support 82
SXGA support 82

T

temperatures, operating and storage iv
transportation 46
TRAP destination address 53
troubleshooting 31

U

USB drives 23
USB receptacles 11, 23, 52
UX80 projector See projector
UXGA support 82

V

VGA connections 51
VGA support 82
video
    format compatibility for 81
volume control 23

W

warnings iii
water and fluid resistance iv
web page management 47
WEEE and Battery Directives 89
whiteboard See interactive whiteboard

X

XGA support 82

Z

zoom 50

SMART TECHNOLOGIES

smarttech.com/support

smarttech.com/contactsupport

smarttech.com/kb/170510