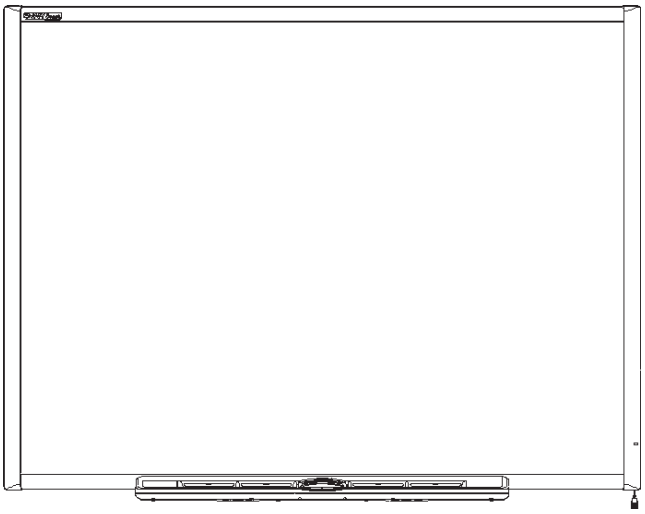

SMART Board® 600 and D600 series

interactive whiteboards

INSTALLATION AND USER GUIDE

SB640 | SB660 | SB680 | SB685 | SB690 | SBD680 | SBD685 | SBD690

Was this document helpful?
smarttech.com/docfeedback/001414

SMART®

Learn more

This guide and other resources for SMART Board 600 and D600 series interactive whiteboards are available in the Support section of the SMART website (smarttech.com/support). Scan this QR code to view these resources on your mobile device.

FCC warning

This equipment has been tested and found to comply with the limits for a Class A digital device, pursuant to Part 15 of the FCC Rules. These limits are designed to provide reasonable protection against harmful interference when the equipment is operated in a commercial environment. This equipment generates, uses and can radiate radio frequency energy and, if not installed and used in accordance with the manufacturer's instructions, may cause harmful interference to radio communications. Operation of this equipment in a residential area is likely to cause harmful interference in which case the user will be required to correct the interference at his own expense.

Trademark notice

SMART Board, SMART Notebook, SMART Meeting Pro, the SMART logo, smarttech and all SMART taglines are trademarks or registered trademarks of SMART Technologies ULC in the U.S. and/or other countries. The Bluetooth word mark is a registered trademark and is owned by the Bluetooth SIG, Inc. and any use of such marks by SMART Technologies ULC is under license. Windows, Microsoft, Excel and PowerPoint are either registered trademarks or trademarks of Microsoft Corporation in the U.S. and/or other countries. Apple, Finder, Mac and Mac OS are trademarks of Apple Inc., registered in the U.S. and other countries. All other third-party product and company names may be trademarks of their respective owners.

Copyright notice

© 2011–2020 SMART Technologies ULC. All rights reserved. No part of this publication may be reproduced, transmitted, transcribed, stored in a retrieval system or translated into any language in any form by any means without the prior written consent of SMART Technologies ULC. Information in this manual is subject to change without notice and does not represent a commitment on the part of SMART.

This product and/or use thereof is covered by one or more of the following U.S. patents:

www.smarttech.com/patents

December 15, 2020

Important information

Before you install and use your SMART Board® 600 or D600 series interactive whiteboard, read and understand the safety warnings and precautions in this installation and user guide. These safety warnings and precautions describe the safe and correct operation of your SMART Board interactive whiteboard and its accessories, helping you to prevent injuries and equipment damage.

NOTE

In this document, the term "interactive whiteboard" refers to your interactive whiteboard and its accessories and options.

Safety warnings and cautions

WARNING

- Failure to follow the installation instructions included with your interactive whiteboard, or found in this guide, could result in personal injury or product damage.
- Read the safety warnings, precautions and other important information published by your projector's manufacturer. Do not stare (or allow children to stare) directly into your projector's beam of light. Do not touch (or allow children to touch) your projector because it can become extremely hot during normal operation.
- Two people are required to safely mount your interactive whiteboard on a wall or floor stand because it might be too heavy for one person to safely maneuver alone. When you lift your interactive whiteboard, you and your assistant should stand on either side of the screen, supporting its weight at the bottom corners while balancing the top with your other hands.
- Do not leave cables on the floor where they can be a tripping hazard. If you must run a cable over the floor, lay it in a flat, straight line and secure it to the floor with tape or a cable management strip of a contrasting color. Handle cables carefully and avoid excessive bending.
- To reduce the risk of fire or electric shock, do not expose your SMART Board interactive whiteboard to rain or moisture.
- Use two wall-mounting brackets to install your SMART Board 685/D685 or 690/D695 interactive whiteboard. Using only one bracket could result in personal injury or product damage.
- Do not mount your SMART Board 600 or D600 series interactive whiteboard on a SMART Board 500 series interactive whiteboard floor stand. Using an older stand could result in personal injury or product damage. Only FS670 stands are certified for use with 660, 680 or D680 models.
- Do not mount a SMART Board 685, D685, 690 or D690 interactive whiteboard on a floor stand. Do not modify either your interactive whiteboard or a floor stand to make them compatible. Using a large interactive whiteboard with a small stand creates a tipping hazard.
- Do not mount the optional USB audio system speakers on a SMART Board 640 interactive whiteboard mounted on an FS640 stand. Using the speakers with the small stand creates a tipping hazard.
- Move your floor stand-mounted SMART Board interactive whiteboard with care. Before moving your floor stand-mounted interactive whiteboard, lower your interactive whiteboard to Position 2, and then proceed with care. Quick stops, excessive force and uneven surfaces might cause your interactive whiteboard to overturn. Before moving a floor stand, make sure that the anti-tip feet are retracted or locked in the up position.
- Do not stand (or allow children to stand) on a chair to touch the surface of your SMART Board interactive whiteboard. Instead, remount the product at the appropriate height, or use a SMART height-adjustable floor stand.
- Do not climb (or allow children to climb) on your wall- or floor stand-mounted SMART Board interactive whiteboard. Climbing on your interactive whiteboard or projector boom, or riding on your floor stand, could result in personal injury or product damage.
- There are no user-serviceable parts inside the pen tray. Only qualified personnel should disassemble the pen tray's printed circuit boards, and this procedure must be done with proper electrostatic discharge (ESD) protection.
- If you are using an RS-232 serial expansion module, a wireless Bluetooth® connection expansion module or a USB audio system, use only the power supply included with that product. These products do not use the same power supplies. Using the wrong power supply might create a safety hazard or damage the equipment. If in doubt, refer to the specification sheet for your product to verify the power supply type.

CAUTION

- If you need to lean your interactive whiteboard against a wall before you mount it, make sure that it remains in an upright position, resting on its pen tray brackets, which are designed to sustain your interactive whiteboard's weight.
- Do not rest your interactive whiteboard on its side or on the top of its frame.
- Do not add any extra weight or excessive pressure to a wall-mounted interactive whiteboard or its pen tray. SMART designed the brackets to support only the weight of your interactive whiteboard during normal use.
- For operating safety and to prevent damage to your interactive whiteboard, connect its USB connector only to a computer that has a USB compliant interface and that bears the USB logo. In addition, the USB source computer must be compliant with CSA/UL/EN 60950 and bear the CE mark and CSA and/or UL mark(s) for CSA/UL 60950.
- If dust or small items prevent pen tray buttons from being pressed or cause constant button contact, remove the obstructions carefully.
- When transporting your SMART Board interactive whiteboard, repack it with as much of the original packaging as possible. This packaging was designed with optimal shock and vibration protection.
- Do not allow excess glass cleaner to flow into the crack between the lower frame and the writing surface, or into the pen tray slots.

Other precautions

If you own a SMART product other than a SMART Board 600 or D600 series interactive whiteboard, refer to the installation manual for your product for relevant warnings and maintenance instructions.

To ensure operating safety and to prevent product damage, observe the following precautions.

- Don't set up or use your interactive whiteboard in an area with excessive levels of dust, humidity or smoke.
- If your SMART Board interactive whiteboard requires replacement parts, make sure that the service technician uses replacement parts specified by SMART Technologies or parts with the same characteristics as the original.
- Be aware that security cable locks aren't designed to be a solid protection measure because the lock can be torn out. However, potential thieves might be reluctant to try to sell a product with a broken security cable lock hole, which would readily identify it as a stolen item.

Contents

Important information **3**

Chapter 1: About your SMART Board 600 or D600 ..... **7**

Features 8
Understanding how your interactive whiteboard works 9
Components and accessories 10

Chapter 2: Installing and securing your interactive whiteboard **12**

Environmental requirements 12
Wall mounting your interactive whiteboard 13
Securing and removing the pen tray 23

Chapter 3: Connecting your interactive whiteboard to your computer **27**

Power safety 27
Connecting with a USB cable 28
Installing SMART software 30
Configuring your computer settings 31
Orienting your interactive whiteboard 32
Connecting a guest laptop 35
Connecting multiple interactive products 35

Chapter 4: Using and maintaining your interactive whiteboard **37**

Tips for trouble-free performance 37
Keeping the writing surface clean 38
Transporting your interactive whiteboard 39
Indicators and controls 40

Chapter 5: Troubleshooting your interactive whiteboard **43**

Adjusting the projected image 43
Resetting your interactive whiteboard 44
Troubleshooting using the Ready light 45
Troubleshooting tips 50
Finding more information 52
Contacting SMART Technical Support 53

Appendix A: Hardware environmental compliance **54**

Waste Electrical and Electronic Equipment regulations (WEEE directive) 54
Restriction of Certain Hazardous Substances (RoHS directive) 54
Packaging 54
China's Electronic Information Products regulations 54

U.S. Consumer Product Safety Improvement Act 55

Chapter 1

About your SMART Board 600 or D600

Features 8
- Touch 8
- Pen tray 8
- Durable surface 8
- Wall-mounting bracket(s) 8
- Standard USB cable 9
- Security cable lock feature 9
- Expansion slot 9
- Optional accessories 9

Understanding how your interactive whiteboard works 9
- SMART software 9

Components and accessories 10
- Optional accessories 11

Your SMART Board 600 or D600 series product is a touch sensitive, front projection interactive whiteboard. It enables you to do everything that you can do at your computer—open and close applications, scroll through files, conference with others, create new documents or edit existing ones, visit websites, play video clips and more—by touching the screen. You can also write over any application in digital ink using a pen tray pen or your finger, and then save these notes to a .notebook file for future reference and distribution.

Features

Your SMART Board 600 or D600 series interactive whiteboard includes many features of earlier SMART Board interactive whiteboards, such as a resistive touch screen and a pen tray. Although the basic operation is the same, SMART made many improvements to make the 600 and D600 series look more up-to-date and easier to use, service and install.

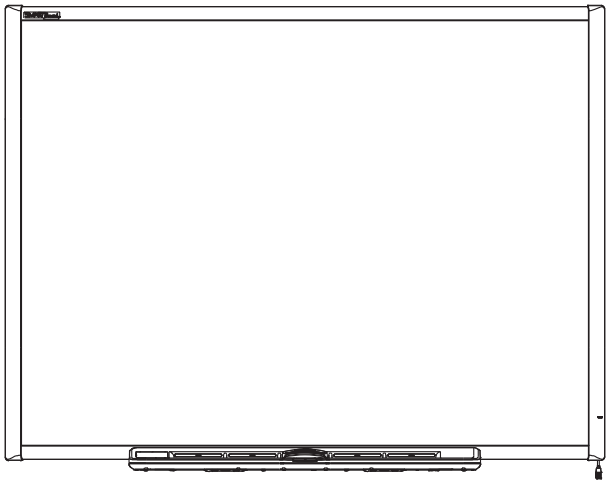

The following models are available:

- 640—48" diagonal
- 660—64" diagonal
- 680/D680—77" diagonal (4:3 aspect ratio)
- 685/D685—87" diagonal (16:10 aspect ratio)
- 690/D690—94" diagonal (16:9 aspect ratio)

Touch

Write, erase and perform mouse functions with your finger, a pen tray pen or the eraser.

Models D680, D685 and D690 offer dual-user capabilities, enabling two users to touch or write simultaneously at the interactive whiteboard in SMART Notebook® collaborative learning software. In dual-user mode, SMART Notebook software switches to full screen-mode and a line divides the screen into two separate workspaces, each with its own set of tools. For teachers, dual-user mode facilitates collaboration, competition, one-to-one instruction and increased student participation at the interactive whiteboard.

Pen tray

Pick up a pen tray pen or the eraser, and the pen tray detects which tool you've selected. Buttons activate the on-screen keyboard, right-click and help functions.

Durable surface

The hard-coated surface is tear proof, optimized for projection and easily cleaned with whiteboard cleaner, or disinfected with a diluted bleach solution.

Wall-mounting bracket(s)

Install your SMART Board interactive whiteboard simply and securely.

Standard USB cable

Connect your SMART Board interactive whiteboard to your computer.

Security cable lock feature

Lock your interactive whiteboard with a security cable to help safeguard it from theft.

Expansion slot

Add optional accessories, such as a SystemOn expansion module.

Optional accessories

To view a variety of accessories for your SMART Board interactive whiteboard, go to smarttech.com/accessories.

Understanding how your interactive whiteboard works

Your interactive whiteboard functions as an input device for your computer, just like a mouse, enabling you to work in any application on your computer from your interactive whiteboard's screen.

When you touch your interactive whiteboard's screen, your interactive whiteboard detects the contact's horizontal and vertical (or x,y) coordinates. Your computer's mouse driver interprets these coordinates and moves the pointer to the corresponding point on the screen.

Using your interactive whiteboard requires a computer and a digital projector. These components work together as follows:

- Your computer runs an application, and then sends the image to your projector.
- Your projector casts the image onto your interactive whiteboard.
- Your interactive whiteboard acts both as your computer's monitor and its input devices, i.e., mouse and keyboard, enabling you to control any application by touching the screen.

SMART software

To use the features of the interactive whiteboard, you must install SMART software on your computer. SMART software includes:

- SMART Product Drivers
- SMART Notebook collaborative learning software

  OR
- SMART Meeting Pro® software

With SMART Product Drivers, your interactive whiteboard's surface responds to the touch of your finger or pen tray pen. The touch of your finger on the screen becomes a mouse click, enabling you to control your computer from your interactive whiteboard. When you remove a pen from the pen tray, sensors detect which tool you're using.

SMART Product Drivers then interact with your computer's mouse driver to change the pointer to a colored pen, enabling you to write in digital ink on your desktop or any open application. When you replace the pen and pick up the eraser, you can erase the digital ink from the screen.

With SMART Notebook software, you can save your notes to a .notebook file or directly into any Ink Aware application, such as Microsoft® Word, Excel® or PowerPoint®. SMART Notebook software features interactive tools and a library of learning resources to help you energize lessons.

Alternatively, you can install SMART Meeting Pro software.

With SMART Meeting Pro software, you can display files on your interactive whiteboard and write notes in digital ink during collaborative work sessions. You can save your notes to a .notebook file and then distribute notes and action items by e-mailing them or saving them to a USB drive for transfer later.

NOTE

In most cases, SMART Product Drivers is downloaded automatically when you install SMART Notebook or SMART Meeting Pro software.

Components and accessories

Your SMART Board 600 or D600 series interactive whiteboard includes the following components. To purchase replacement parts, contact your authorized SMART reseller.

Component	Description
USB cable	An included 16' 5" (5 m) USB cable enables you to connect your SMART Board 600 or D600 series interactive whiteboard to a USB receptacle on your computer. 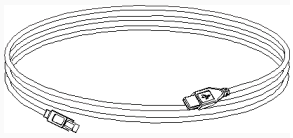

Component	Description
Pens	The pens have rubberized grip areas and are colored to match four colors of digital ink: black, red, green and blue. 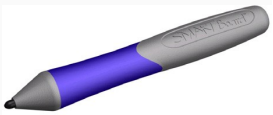 You can use dry-erase markers instead of the included pens, as long as they're a similar shape, don't scratch or mark your interactive whiteboard's surface and reflect infrared light. If the substitute isn't reflective to infrared light, the pen tray sensors might not detect the presence of the pen. **NOTE** Some of SMART's older pens aren't designed to reflect infrared light, and the pen tray sensors might not detect them reliably. **TIP** Wrap light-colored tape around a substitute pen to improve the reflection of infrared light, helping with tool detection.
Eraser	The eraser is rectangular to mimic a traditional chalkboard eraser. Again, you can use a substitute object, as long as it has a similar shape, doesn't scratch or mark your interactive whiteboard's surface and reflects infrared light. 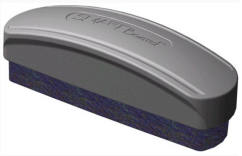
SMART Board interactive whiteboard wall-mounting kit	The 32" (81.3 cm) wall-mounting bracket comes with five screws and drywall anchors, enabling you to wall-mount your interactive whiteboard simply and securely. **NOTE** Models 685, D685, 690 and D690 come with two wall-mounting kits.

Optional accessories

You can add a variety of optional interactive whiteboard accessories to best meet your specific needs. Purchase these items when you order your interactive whiteboard, or later from your authorized SMART reseller. For more information about accessories, go to smarttech.com/accessories.

Chapter 2

Installing and securing your interactive whiteboard

Environmental requirements 12
Wall mounting your interactive whiteboard 13
Recommended heights for wall-mounting 13
For children or for adults in wheelchairs 14
For adults of average height 14
For children and short adults, and for clearing obstructions to the projected image 14
Tools required to wall-mount your interactive whiteboard 15
Wall-mounting your interactive whiteboard 16
Aligning your interactive whiteboard with your projector 20
Completing your installation 20
Securing and removing the pen tray 23
Locking the pen tray to your interactive whiteboard 23
Securing the pen tray to the pen tray brackets 24
Removing the pen tray 25

Refer to these topics for information about mounting your SMART Board 600 or D600 series interactive whiteboard on a floor stand or on a wall.

Environmental requirements

Before installing the interactive whiteboard, review the following environmental requirements.

Environmental requirement	Parameter
Operating temperature	41°F to 95°F (5°C to 35°C)
Storage temperature	-40°F to 120°F (-40°C to 50°C)
Humidity	• 5% to 80% relative humidity, non-condensing • Humidity above 80% can cause slight wrinkling in the screen surface sheet. The wrinkles disappear when the humidity lowers.

Environmental requirement	Parameter
Water and fluid resistance	• Intended for indoor use only. Doesn't meet any salt-spray or water ingress requirements. • Don't pour or spray liquids directly onto the interactive whiteboard or any of its sub-components. These liquids might get into areas where they could damage sensitive electronic components. Refer to *Keeping the writing surface clean* on page 38 for detailed instructions on cleaning the interactive whiteboard.
Dust	• Moderate dust. Intended for use in office and classroom environments. Not for industrial use where heavy dust and pollutants can cause malfunctions or impaired operation. • Designed for pollution degree 1 (P1) as per EN61558-1, which is defined as "No pollution or only dry non-conductive pollution."
Electrostatic discharge (ESD)	• Designed to withstand electrostatic shock • EN61000-4-2 severity level 4 for direct and indirect ESD • No malfunction or damage up to 15kV (both polarities) with a 330 ohm, 150 pF probe (air discharge) • Unmated connectors meet no malfunction or damage up to 8kV for direct (contact) discharge
Conducted and radiated emissions	EN55022/CISPR 22, Class B

Wall mounting your interactive whiteboard

WARNING

Two people are required to safely mount your interactive whiteboard on a wall.

IMPORTANT

For information on installing your SMART Board interactive whiteboard on a floor or table stand, go to the SMART Board 600 and D600 series Support Web page.

Recommended heights for wall-mounting

Consider the general height of your user community when you choose a location for wall-mounting your interactive whiteboard. If you mount your interactive whiteboard too low, it might force tall people to bend over uncomfortably. If it's too high, other people might need to reach up too far. Also remember to leave enough room on either side so that you can stand beside it.

Use the following guidelines to determine the optimal height for your interactive whiteboard.

For children or for adults in wheelchairs

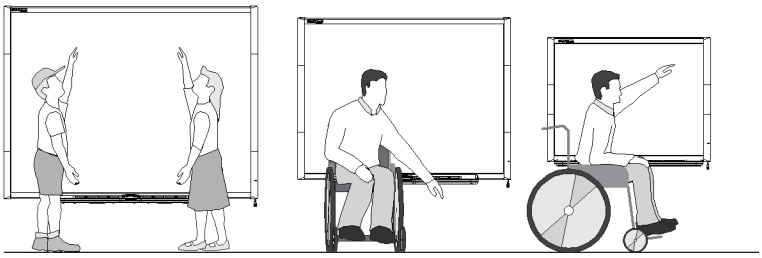

Model	Distance from floor to bottom of bracket	Distance from floor to top of interactive whiteboard
680/D680/685/D685/690/D690	59 1/2" (151.1 cm)	63 3/4" (161.9 cm)
660	56 1/2" (143.5 cm)	60 3/4" (154.3 cm)
640	51 1/2" (130.8 cm)	55 3/4" (141.6 cm)

For adults of average height

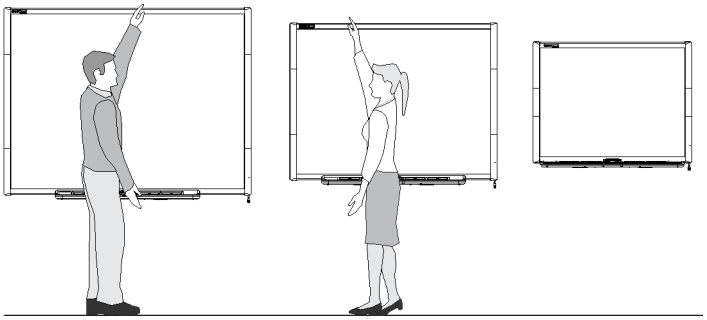

Model	Distance from floor to bottom of bracket	Distance from floor to top of interactive whiteboard
680/D680/685/D685/690/D690	77 1/2" (196.9 cm)	81 3/4" (207.6 cm)
660	69 1/2" (176.5 cm)	73 3/4" (187.3 cm)
640	69 1/2" (176.5 cm)	73 3/4" (187.3 cm)

For children and short adults, and for clearing obstructions to the projected image

If SMART Board 640 interactive whiteboard users are of shorter stature, you might want to mount your interactive whiteboard lower on the wall, while keeping it high enough that furniture or other objects don't obstruct the projected image.

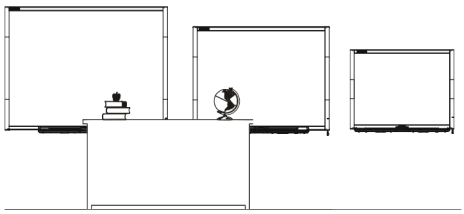

Model	Distance from floor to bottom of bracket	Distance from floor to top of interactive whiteboard
640	59 1/2" (151.1 cm)	63 3/4" (161.9 cm)

Tools required to wall-mount your interactive whiteboard

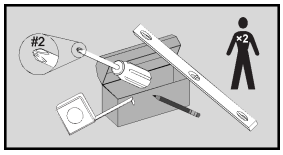

To wall-mount your interactive whiteboard you'll need the following tools, which aren't included:

- A Phillips No. 2 screwdriver (all screws must be tightened by hand)
- A ruler or measuring tape
- A carpenter's level
- A pencil or other marking device
- A stepladder

WARNING

- Failure to follow these instructions could result in personal injury and product damage.
- Two people are required to safely mount your interactive whiteboard because it might be too heavy for one person to safely maneuver onto the wall-mounting brackets. When you lift your interactive whiteboard, you and your assistant should stand on either side of the screen, supporting its weight at the bottom corners while balancing the top with your other hands.

CAUTION

- If you need to lean your interactive whiteboard against a wall before you mount it, make sure that it remains in an upright position, resting on its pen tray brackets, which are designed to sustain your interactive whiteboard's weight.

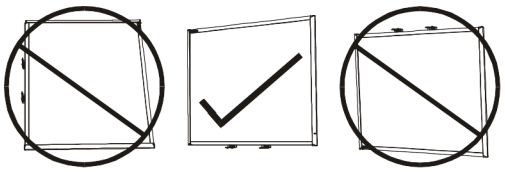

- Do not rest your interactive whiteboard on its side or on the top of its frame.

NOTES

- To take full advantage of all the interactive features of your SMART product, you must connect a digital projector (not included).
- Some steps in the following procedure look different than illustrated if you have a SMART Board 685/D685 or 690/D690 interactive whiteboard.

Wall-mounting your interactive whiteboard

Follow this procedure to mount your SMART Board interactive whiteboard on a wood or metal framed wall surfaced with gypsum or drywall. Some notes are provided for concrete wall installations.

IMPORTANT

If you need to install your interactive whiteboard system on certain masonry wall types, including concrete or cinder block, reinforced concrete walls, walls with plaster lath finishing, walls of unusual construction or other types of walls, refer to your local building authority for instructions, recommendations and safe work practices.

To wall-mount your interactive whiteboard

1. Using a pencil, a carpenter's level and a ruler or measuring tape, draw a horizontal line on the wall, centered on the mid-point of your interactive whiteboard's future position. If your projector is already mounted on the ceiling, this is roughly the center of your projected image.

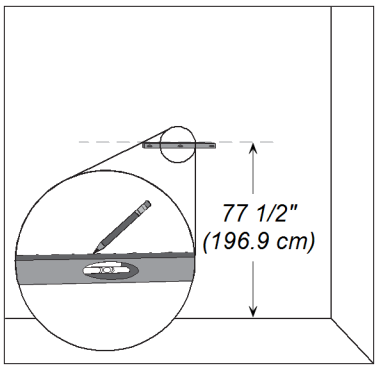

IMPORTANT

The illustration shows a common height for adult users of SMART Board 680, D680, 685, D685, 690 and D690 interactive whiteboards. Refer to *Recommended heights for wall-mounting* on page 13 for recommendations for other models and audiences.

2. Using the mounting bracket as a template, mark the location of the five mounting holes on the wall.

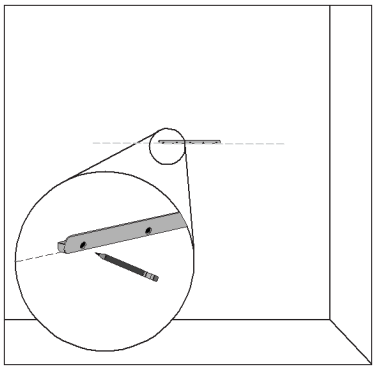

OR

If you're installing a SMART Board 685/D685 or 690/D690 interactive whiteboard, space your wall-mounting brackets' innermost screw holes 4" (10.2 cm) or 6" (15.3 cm) apart respectively, and then mark the location of the 10 mounting holes on the wall, as illustrated.

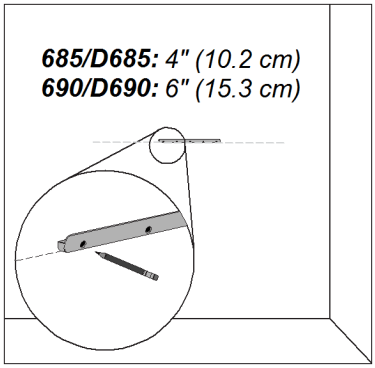

WARNING

Use two wall-mounting brackets to install your SMART Board 685/D685 or 690/D690 interactive whiteboard. Using only one bracket could result in personal injury or product damage.

3. Use the Phillips No. 2 screwdriver to secure an included self-tapping wall anchor at each mark.

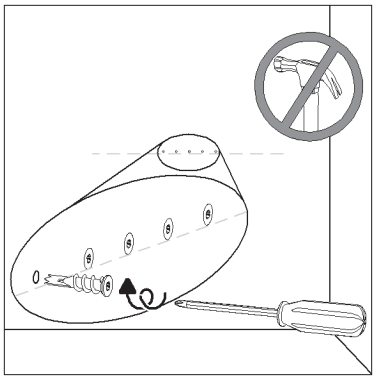

CAUTION

Do not use a hammer to secure these anchors.

If you're unable to screw an anchor flush to the wall, you might have encountered a stud. If this is the case, you don't need to use an anchor in this location. The stud will provide adequate support for the screw that secures the bracket to the wall.

NOTES

- For a concrete wall, drill holes at the marks, and then insert concrete anchors (not included) into the holes.
- If necessary, stand on a stepladder so that you can secure these wall anchors flush to the wall.

4. Using the screwdriver, secure the wall-mount bracket to the self-tapping wall anchors with the included screws.
5. With the help of another person, temporarily hang your interactive whiteboard on the center of its wall-mounting bracket.

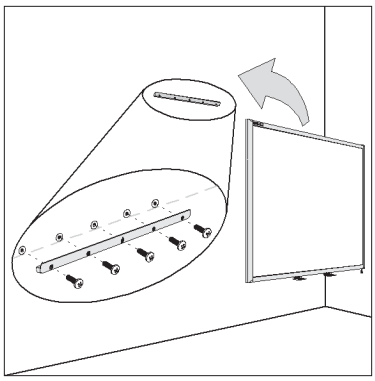

Aligning your interactive whiteboard with your projector

If your projector is installed in a fixed location, align your interactive whiteboard to the projected image before you secure the L-shaped brackets. A correctly aligned image fits squarely on your interactive whiteboard's screen. Each side of the projected image should extend almost to the edge of the display surface.

IMPORTANT

For SMART Board D600 series interactive whiteboards, it is important to align your interactive whiteboard and projector correctly so that the projected image divider in dual-user mode in SMART Notebook software aligns with the physical center of your interactive whiteboard. The actual divider will always be in the physical center of your interactive whiteboard, regardless of where your projected image falls.

To align your interactive whiteboard with your projector

1. Install or position your projector on a projector platform or stand if necessary, and then turn it on and point the lens of your projector at the center of your interactive whiteboard's screen.
2. Make fine adjustments to the image size, level and focus of the projected image, following your projector manufacturer's instructions.
3. Slide your interactive whiteboard sideways on its bracket to align it with the projected image.
4. Repeat steps 2 and 3 until your interactive whiteboard is properly aligned.

Completing your installation

Refer to the following procedure to finish installing your interactive whiteboard.

To complete your installation

1. Below the bottom frame, you'll find two L-shaped metal brackets. In the center of each bracket there is a metal tab. Push this tab back until it contacts the wall, and then mark the location of the mounting holes with your pencil.

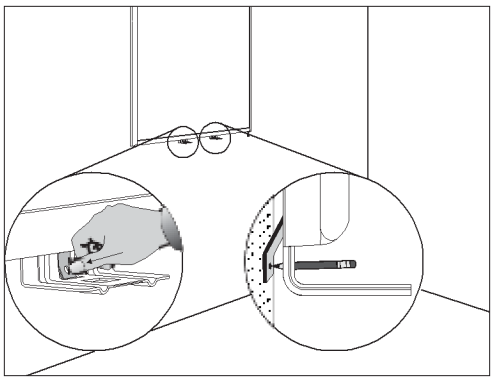

2. Remove your interactive whiteboard from the wall, and then use the screwdriver to secure a self-tapping wall anchor at each mark.

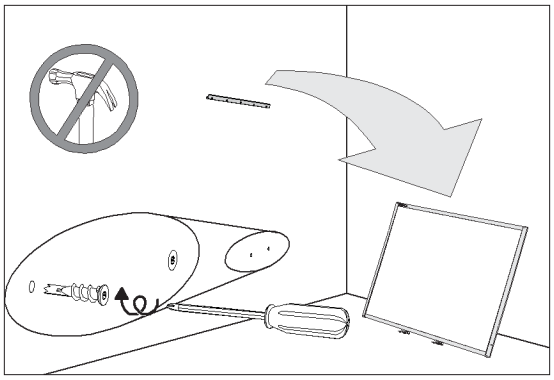

NOTE

For a concrete wall, drill holes at the marks, and then insert concrete anchors into the holes.

3. With the help of another person, hang your interactive whiteboard back on the wall-mounting bracket, and then secure the L-shaped metal brackets to the wall anchors with the included screws, as illustrated.

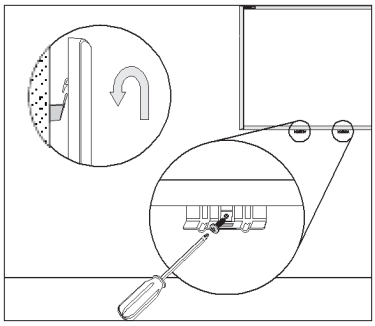

NOTE

If you want to lock your interactive whiteboard with a security cable, see Locking the pen tray to your interactive whiteboard on page 16 before securing these brackets.

4. Position the pen tray in line with the two L-shaped metal brackets, and then slide it toward the wall until it rests snugly against the bottom frame of your interactive whiteboard. The pen tray clicks into place.

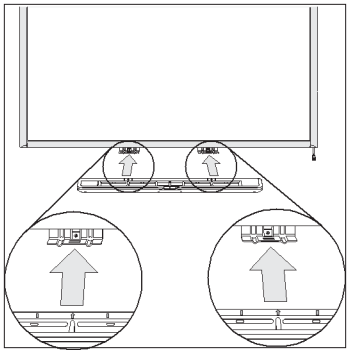

5. Route the modular I^2C cable through the cable management channel under the lower-right end of the pen tray, and then insert its connector into receptacle 1.

6. Press the cable into the cable management channel on the bottom of the tray. This step protects the modular cable's RJ11 connector from damage if the pen tray is removed without first disconnecting the cable.

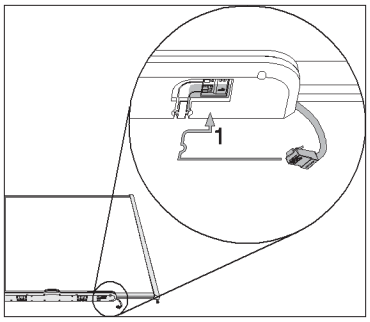

7. Place the four pens and the eraser into their respective slots in the pen tray.

Securing and removing the pen tray

Because your SMART Board interactive whiteboard's pen tray is detachable, you might want to safeguard it—and your interactive whiteboard—by anchoring it with a security cable. If you need to transport or repair the display, you may need to remove it from the interactive whiteboard.

NOTE

Securing the pen tray can provide theft deterrence for your interactive whiteboard because the screws that secure your interactive whiteboard to the wall are located directly behind the pen tray, and must be removed to detach the pen tray. In effect, when you secure the pen tray, you're also securing your interactive whiteboard if the security cable is tight.

Locking the pen tray to your interactive whiteboard

Underneath the pen tray, you'll find a lock slot that accommodates a security cable, such as a Kensington® lock.

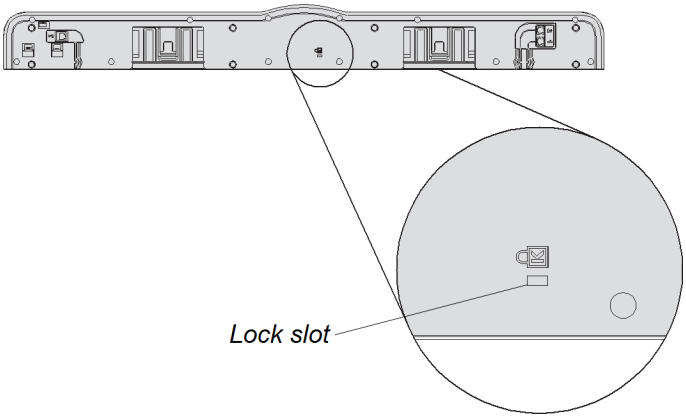

IMPORTANT

Be aware that security cable locks are not designed to be a solid protection measure because the lock can be torn out. However, potential thieves might be reluctant to try to sell a product with a broken security cable lock hole, which would readily identify it as a stolen item.

To lock the pen tray to your interactive whiteboard

1. Before you secure your pen tray brackets to the wall as shown in step 3 on page 15, loop your security cable behind the brackets.
2. Thread the lock end of the cable through the loop end of the cable.
3. Verify that the cable is tight enough that you can't remove the pen tray while the lock is in place, and then install the pen tray.
4. Insert the prong end of the security cable into the lock slot, and then complete the pen tray installation by securing it to the wall.

Securing the pen tray to the pen tray brackets

Since you can remove the pen tray without tools, you might want to securely attach it to its brackets. To do this, insert two No. 8/M4 screws (not included) into the holes indicated in the following illustration.

IMPORTANT

Older units don't include this feature.

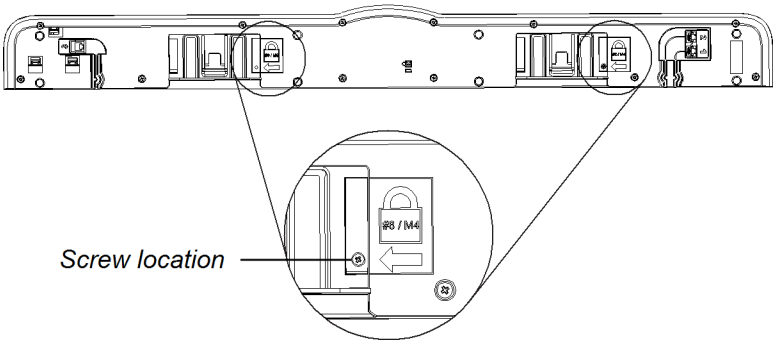

Removing the pen tray

You might need to remove the pen tray when you transport or repair your interactive whiteboard.

WARNING

There are no user-serviceable parts inside the pen tray. Only qualified personnel should disassemble the pen tray's printed circuit boards, and this procedure must be done with proper electrostatic discharge (ESD) protection.

CAUTION

If dust or small items prevent the pen tray buttons from being pressed or cause constant button contact, remove the obstructions carefully.

NOTE

You don't need to wear ESD protection when performing the following procedure.

To remove the pen tray

1. Turn off your interactive whiteboard by disconnecting the USB cable to your computer or by disconnecting the expansion module's power supply, as appropriate.

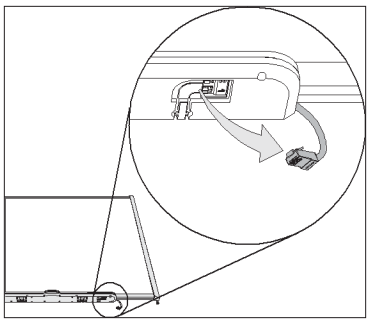

2. Remove the pens and the eraser from the pen tray.

3. Reach under the pen tray and disconnect the modular cable.
4. If you secured the pen tray to its brackets using two screws as described in the previous section, remove these screws.
5. If you secured the pen tray using a Kensington lock or similar device, unlock and remove the lock.
6. Reach under the pen tray and pull down on the two large plastic clips. Because the ends of these clips project slightly downward, they're easy to locate.

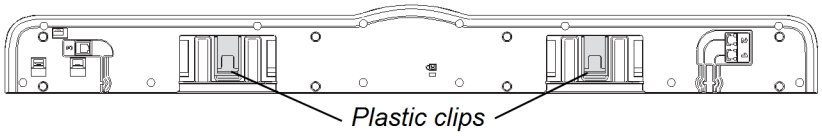

7. While applying downward pressure to the clips, gently slide the pen tray toward you until it detaches from the two L-shaped metal brackets.

Chapter 3

Connecting your interactive whiteboard to your computer

Power safety 27
Connecting with a USB cable 28
Installing SMART software 30
USB extender cables and hubs 30
Configuring your computer settings 31
Recommended settings 32
Matching your computer's resolution to your projector's resolution 32
Orienting your interactive whiteboard 32
Connecting a guest laptop 35
Connecting multiple interactive products 35

The included USB cable enables you to connect your computer to your interactive whiteboard. Because this cable provides both a digital signal and power from your computer to your interactive whiteboard, you don't need an additional power supply.

Your interactive whiteboard will be touch sensitive after you install SMART Product Drivers on your connected computer. After connecting your interactive whiteboard to your computer, you must perform a brief orientation procedure. See *Orienting your interactive whiteboard* on page 32.

Power safety

CAUTION

For operating safety and to avoid damage to your interactive whiteboard, connect its USB connector only to a computer that has a USB compliant interface that bears the USB logo. In addition, the USB source computer must be compliant with CSA/UL/EN 60950 and bear the CE mark and CSA and/or UL mark(s) for CSA/UL 60950.

Connecting with a USB cable

IMPORTANT

For information on connecting using wireless or serial expansion modules, see the accessory guides on the SMART Board 600 and D600 series Support Web page.

Your SMART Board interactive whiteboard has a high-power USB 2.0 high-speed peripheral interface that runs at speeds of up to 12 Mbps. The unit works with USB 2.0- and USB 1.1- compliant interfaces.

Your interactive whiteboard's main USB connection is a captive flying lead cable. The connector is a USB Type-B receptacle.

This captive cable provides convenient access to the USB receptacle without you having to remove your interactive whiteboard from the wall. You can also place the flying lead and USB cable in the channel on the back of your interactive whiteboard so that they aren't visible.

To connect using a USB cable

1. Connect one end of the included USB cable to the captive connector suspended from your interactive whiteboard's lower-right corner.

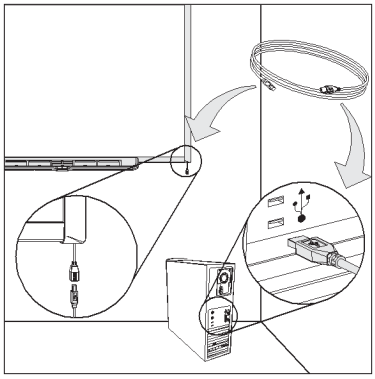

NOTE

You must apply approximately 10 oz. (300 g) of downward pressure to unplug a USB cable from the captive USB receptacle. Because an entire 16' 5" (5 m) USB cable weighs approximately 7 oz. (200 g), you don't need to tape or otherwise secure the USB cable to the captive connector. The design ensures that if someone trips on the cable it will disconnect rather than cause injury or damage to the controller module.

2. Connect the other end of the USB cable to a USB receptacle on your computer.
3. Press the power button on your computer to start your interactive whiteboard.
4. Log on to your computer if required. If your computer doesn't require you to log on, allow your computer to reach its default start screen.

   If you're using a Mac computer, or if you already have the appropriate USB driver installed on your Windows® computer, the Ready light on the lower-right frame immediately turns red, and then flashes green. If this happens, see *Installing SMART software* on the next page.

If the appropriate driver isn't installed on your Windows computer, a *Found New Hardware* wizard helps you locate the driver for the newly connected USB Human Interface Device (HID), that is, your interactive whiteboard. Refer to the following procedure to install the USB driver.

Windows only

To install the USB driver

1. Click **Next** to direct the wizard to search for an appropriate driver.
2. Click **Next** again to direct your computer's operating system to search the driver database on your hard drive for the appropriate driver.

   NOTE

   If the Windows operating system doesn't find the correct driver, insert the Windows CD in your CD drive, and then install a USB HID driver. Because USB HID is a subclass of USB devices, the drivers aren't always included in a default installation. You must install these drivers on your computer before the included USB cable will work properly.

3. Click **Finish** after the driver search or driver installation finishes.

   The Ready light turns red and then flashes green, indicating that the controller is receiving power from the USB connection and is operating in HID mouse mode.

Installing SMART software

You must install SMART software on the computer connected to your interactive whiteboard system to access all of its features.

Download SMART software from smarttech.com/software. These pages list the minimum hardware requirements for each software version. If SMART software is already installed on your computer, take this opportunity to upgrade your software to ensure compatibility.

USB extender cables and hubs

The 16' 5" (5 m) USB cable included with your interactive whiteboard conforms to the USB 2.0 standard for maximum length. If the included USB cable isn't long enough, use active USB extender cables, USB extenders or hubs to extend the connection.

NOTES

- Passive USB extension cables aren't supported.
- Some computers use internal active hubs to provide more USB receptacles. The computer's operating system might recognize these internal hubs as external devices, limiting the number of USB extenders that you can use.

Alternatively, USB extenders with Cat 5 cabling enable you to extend your cable to approximately 325' (100 m).

NOTE

When you use these units, your cables and connectors must meet the vendor's specifications. Impedance mismatches and poor connections can cause signal degradation and performance problems with your interactive whiteboard.

A USB hub should also work well with your interactive whiteboard. If you also use streaming audio through the USB hub, ensure that the Microsoft USB drivers are up-to-date so that your interactive whiteboard's performance doesn't become choppy, intermittent or otherwise unacceptable.

IMPORTANT

- If you use a USB extender or hub with your interactive whiteboard, it must comply with USB 1.1 or USB 2.0 interfaces to work correctly. It must also provide at least 300 mA to your interactive whiteboard.
- Some self-powered extenders and hubs provide only up to 100 mA to a connected device and therefore won't work with your interactive whiteboard.

For more information about extending your USB connection, see *Extending USB Connections* (smarttech.com/kb/099641).

Configuring your computer settings

For optimal configuration, use the following recommended settings for the computer supporting your interactive whiteboard.

Recommended settings

Configure your computer's power management settings to turn off the monitor after one hour of inactivity and to put the hard disks into standby mode after two hours. This extended period prevents the computer from shutting down unexpectedly (for example, during presentations or meetings that have gaps in computer activity).

Your computer will stop sending an RGB video signal to your projector after a period of idle time, which also triggers the projector to go into standby mode. Similarly, you can put your projector in standby mode by following the manufacturer's instructions included with your projector. To change the settings, see the instructions included with your operating system.

Matching your computer's resolution to your projector's resolution

Ensure that the resolution settings for your projector and computer match. If your computer's resolution doesn't match the projector's resolution, the image won't properly fill your interactive whiteboard's screen, and might shimmer or be distorted. See Getting the Best Image Quality on Your SMART Board Interactive Whiteboard for more information.

Determine your projector's native resolution, indicated in your projector's user's guide, and then set your computer's resolution to match. You can change your computer's resolution in Windows Control Panel or in the Apple System Preferences. If you need further help changing your computer's resolution, see the instructions included with your operating system.

You might also need to adjust your computer's refresh rate to obtain the best results. Set the computer to an initial refresh rate of 60 Hz, and then adjust this rate up or down until you determine the ideal refresh rate. For more information on changing your computer's refresh rate, see the instructions included with your operating system.

Orienting your interactive whiteboard

Your SMART Board interactive whiteboard includes default orientation data. Your interactive whiteboard's controller module uses this data if you haven't oriented your interactive whiteboard with SMART Product Drivers.

After you install SMART Product Drivers on your computer, orient your interactive whiteboard. An orientation performed with SMART Product Drivers is called a *User Orientation*. Orienting your interactive whiteboard ensures the greatest possible level of writing and touch accuracy.

Orient your interactive whiteboard if your projector or interactive whiteboard has moved since you last used it, or whenever the mouse pointer isn't properly aligned with your finger or a pen tray pen when you touch the screen.

The following table describes the different orientation types:

Default manufacturing orientation	When your interactive whiteboard uses the default manufacturing orientation data, the touch point on the screen corresponds fairly well to the projected computer desktop image, provided that the projected image fills the entire interactive screen. The default orientation is a simple 2-point orientation, which might result in the projected touch point being offset from the actual contact location. Increase the accuracy of your touch by performing a 9-, 12- or 20-point orientation. **NOTE** You can restore the default orientation parameters by holding the Reset button on the controller module for at least three seconds.
4- and 9-point user orientation	When you perform a quick 4-point or the standard 9-point orientation, the orientation data is saved in your interactive whiteboard controller module's flash memory (that is, the orientation data stays with your interactive whiteboard). If you connect a different computer, the orientation data for your interactive whiteboard remains unchanged.
12- or 20-point user orientation	You can also perform a 12- or 20-point user orientation. Unlike the 4- and 9-point orientations, the drivers save the 12- and 20-point orientation data on your computer, so it stays with your computer instead of your interactive whiteboard. Resetting the controller module doesn't clear the 12- or 20-point orientation data from your computer. If you attach a different computer, your interactive whiteboard uses the highest level of orientation data in the controller's memory.

To orient your interactive whiteboard

1. Press and hold the two large pen tray buttons at the same time.

   OR

   Press the **Help** button on the pen tray, and then select **Orient/Align the SMART Product**.

   NOTE

   For more information on the pen tray buttons, see *Pen tray buttons* on page 40.

   The orientation screen opens.

2. Pick up a pen from the pen tray.

3. Beginning at the upper-left corner of the screen, touch the center of the target firmly with the tip of the pen until the target moves to the next point. Try not to flick the pen when you lift it from the screen, and make sure that the lift direction is at a right angle to the screen.

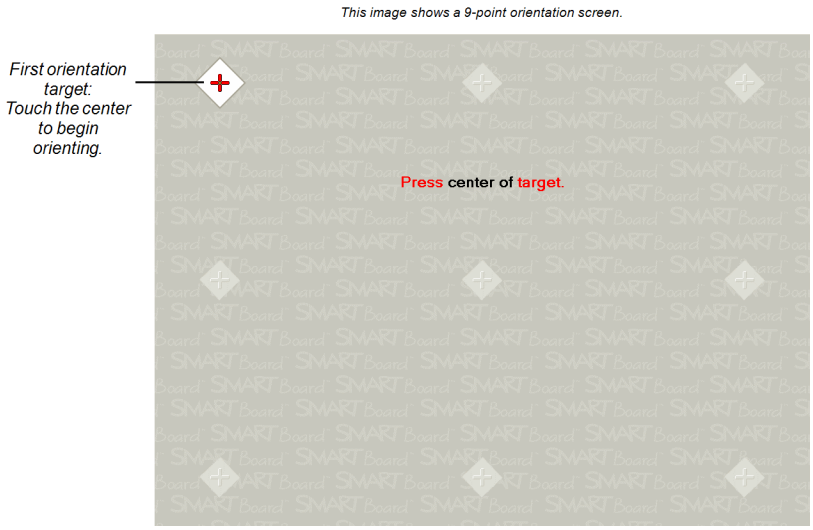

NOTE

Although you can use your finger to orient your interactive whiteboard, a fine-point tool such as a pen tray pen provides greater precision when touching the targets.

4. Repeat step 3 until you arrive at the last point.

NOTE

If you aren't satisfied with the precision of a particular point, press the left arrow key on your computer's keyboard to repeat the orientation for that point.

5. At the last point, touch the center of the target firmly and continue pressing until the message "Please wait while Orientation completes" appears.

   The orientation screen closes.

The orientation procedure can be 4, 9, 12 or 20 touches, depending on the precision setting you specify in your SMART Board Settings in the SMART control panel. The following procedure shows you how to change the precision setting.

To select a 4-, 9-, 12- or 20-point orientation procedure

1. Press the SMART software icon in the Windows notification area or Mac Dock, and then select **Control Panel**.
2. Press **SMART Hardware Settings**.

3. If you have more than one SMART product connected, select the appropriate interactive whiteboard.
4. Select **Orientation/Alignment Settings** from the drop-down list.
5. Select the desired orientation setting, and then press **OK**.
6. Perform an orientation procedure so that the changes take effect. See *To orient your interactive whiteboard* on page 33.

Connecting a guest laptop

If you want to connect a guest laptop without installing SMART Product Drivers on it, disconnect the USB cable from your resident computer, and then connect it to the laptop. You'll immediately have touch control of your interactive whiteboard. However, you'll need to connect a video cable between the laptop and your projector.

NOTES

- With a laptop connected, the Ready light on your interactive whiteboard blinks until you install SMART Product Drivers. This is normal. See *The ready light* on page 41 for more information about Ready light states.
- If your interactive whiteboard connects to the resident computer with an RS-232 serial cable or a wireless Bluetooth connection, you don't have to disconnect it. The USB cable connection to the guest laptop overrides the expansion module connection.

You must also install SMART Product Drivers (see page 30) on your laptop if you want to use all the features of the interactive whiteboard.

Connecting multiple interactive products

You can connect more than one interactive product to your computer. For example, you can have two SMART Board interactive whiteboards connected to one computer and have touch control of each product.

NOTES

- If you're using more than one interactive whiteboard, you'll need a projector for each unit.
- On SMART Board D600 series interactive whiteboards, connection to multiple interactive products is available in single-user mode only.

After you set up your equipment, configure SMART Product Drivers. Start by deciding how you want the displays to work together.

You can present the same desktop on all products, enabling people in different locations to view the same image. To achieve this effect, daisy chain the projectors or use a distribution amplifier to send the computer's video signal to more than one display or projector.

You can also present different views of the same desktop across interactive products. With this option, you have the flexibility of opening one window on each screen, or splitting one application across multiple screens. To set this up, you must send the video signal from the computer to each display or projector. To do this, your setup must include one of the following:

- A separate video card in your computer for each projector or each display
- A video card that splits the video signal and sends it to multiple displays
- A video distribution amplifier between your computer and the projectors or displays

If you're stretching your computer's desktop across more than one interactive screen and you're using an older operating system, you must tell SMART Product Drivers how your products are arranged. To do this, open the SMART control panel, press **SMART Board Settings**, and then select **Arrange Video Output** from the list. Depending on your setup, you might need to change your computer's display settings. For more information, read the documentation for your computer's video card.

You must orient each interactive product separately so that the pointer is properly aligned when you touch the product. To do this, open the SMART control panel and select **Orient/Align the SMART Product**. Refer to the Help Center for the specific procedure to orient each display. To access the Help Center, press the pen tray's **Help** button. For more information on the pen tray buttons, see *Pen tray buttons* on page 40.

After you set up your multiple displays, each display has touch control. However, some applications are unable to accept cursor commands/mouse input from more than one source at a time. To enable the multiple touch setting, refer to the topics in the Help Center for instructions.

For more information on setting up multiple SMART products, see *Connecting Multiple SMART Board Interactive Whiteboards to One Computer* (smarttech.com/kb/000315).

Chapter 4

Using and maintaining your interactive whiteboard

Tips for trouble-free performance 37
- Safety tips for teachers 37
- Preventing damage to your interactive whiteboard 38

Keeping the writing surface clean 38
- Removing permanent marker ink stains 39

Transporting your interactive whiteboard 39

Indicators and controls 40
- Pen tray buttons 40
- Pen tray LEDs and sensors 41
- Cleaning the pen tray's sensors 41
- The ready light 41

Tips for trouble-free performance

Follow the guidance on this page to help ensure trouble-free performance with your interactive whiteboard. In general, remember to:

- Connect your interactive whiteboard to a USB or serial interface that's recognized by the operating system and that isn't being used by another application.
- Make sure that you place all the pens and the eraser securely in the pen tray if you want to use your finger to touch the interactive screen. If you lose a pen, place a substitute object in the missing pen's pen tray slot so that your interactive whiteboard doesn't sense the missing tool and assume that you're currently using it on the interactive surface.

Safety tips for teachers

- Instruct your students not to look directly at the light beam from the projector. Instead, encourage them to keep their backs to the projector when working at the interactive whiteboard. Before students turn to face the class, they should take a step sideways, out of the projector's beam.

- Make sure that you don't look directly into the projector's light beam. Keep your back to the class when you write over a projected image. Step to the side of your interactive whiteboard before you turn to face the class.
- Instruct your students not to touch the projector because it can become extremely hot during normal operation.
- Don't use a chair to increase a student's reach. If your students are unable to reach the top of the interactive whiteboard, lower it. You might need to remount a wall-mounted unit at a lower position. If your interactive whiteboard is mounted on a floor stand, lower it with the help of another adult.
- Instruct your students not to run in the vicinity of a SMART Board interactive whiteboard floor stand because they might trip over the floor stand's feet.

Preventing damage to your interactive whiteboard

Although your SMART Board interactive whiteboard's surface is very durable, take the following precautions to prevent damage to the interactive screen and other components.

- Don't use sharp or pointed objects, such as ballpoint pens or pointers, as writing tools.
- Don't use abrasive erasers or harsh chemicals when cleaning your product.
- Don't leave adhesive tape on the writing surface for extended periods. Lifting the tape might remove the coating that provides your product's dry-erase capability.
- Don't set up and use your interactive whiteboard in an area with excessive levels of dust, humidity or smoke.

Keeping the writing surface clean

IMPORTANT

- Before you clean your interactive whiteboard, turn off or disconnect your computer so that you don't scramble the desktop icons or inadvertently activate applications when you wipe the screen.
- To view dirt or streaks more easily, set your projector to standby (lamp off) mode.

With proper care, your SMART Board interactive whiteboard will provide years of trouble-free service. Follow these tips to keep the screen surface clean:

- Don't use dry-erase markers, which can be very difficult to remove.
- If dry-erase ink is used, erase it as soon as possible after use. The longer dry-erase ink stays on your interactive whiteboard's surface, the more difficult it is to remove.

- If erasing doesn't completely remove dry-erase ink marks, clean the writing surface with a household glass cleaner, such as Windex, daily, weekly or as required.
- Remove excess dry-erase dust with a damp cloth before using a cleaner.
- Use dry-erase marker cleaner, such as Expo dry-erase cleaner, if you can still see marks after using a household glass cleaner.
- Don’t spray cleaner directly onto the screen’s surface. Instead, spray a light amount of cleaner on a cloth and then gently wipe the screen.
- Don’t allow excess glass or whiteboard cleaner to flow into the crack between the lower frame and the writing surface, or into the pen tray slots.
- Use isopropyl alcohol for stubborn stains and ghosting.

TIP

For information on disinfecting your interactive whiteboard, see Disinfecting Your SMART Board Interactive Whiteboard.

Removing permanent marker ink stains

You can use a high-odor dry-erase marker to remove marks from a permanent marker, because dry-erase ink contains solvents that can remove permanent ink. Cover the permanent ink with the dry-erase ink, and then wipe with a soft cloth while the ink is still wet. If any trace of the ink remains, spray a cloth with a glass or whiteboard cleaner and wipe the area clean.

TIP

When removing permanent marker ink, don’t use low-odor or non-scented dry-erase markers, which don’t contain the appropriate solvents.

Transporting your interactive whiteboard

Save your original SMART Board interactive whiteboard packaging so that it’s available if you need to transport your interactive whiteboard. When required, repack your interactive whiteboard with as much of the original packaging as possible. This packaging was designed with optimal shock and vibration protection. If your original packaging is no longer available, you can purchase the same packaging directly from your authorized SMART reseller.

If you prefer to use your own packaging materials, make sure that you adequately protect your interactive whiteboard. Ship the unit in an upright position to deter shippers from placing heavy objects on it.

If you ship your interactive whiteboard frequently, consider purchasing a more durable, hard shipping case from SMART Technologies. With its foam-lined interior, aluminum edges and valances, and steel-reinforced corners, this shipping case protects your SMART Board interactive whiteboard and has dual-tilt wheels for ease of transport. To order a hard shipping case, contact your authorized SMART reseller.

Indicators and controls

Your SMART Board 600 or D600 series interactive whiteboard has the following indicators and controls:

- Pen tray buttons, LEDs and sensors (see *Pen tray buttons* below)
- A Ready light. See *The ready light* on the next page.
- The controller module's Reset button. See *Resetting your interactive whiteboard* on page 44.

In addition to providing a convenient place to hold the pens and the eraser, the pen tray has several controls, sensors and indicators.

Pen tray buttons

In the center of the pen tray, there are three buttons. The two large rectangular buttons default to keyboard (left button) and right-click (right button) functions.

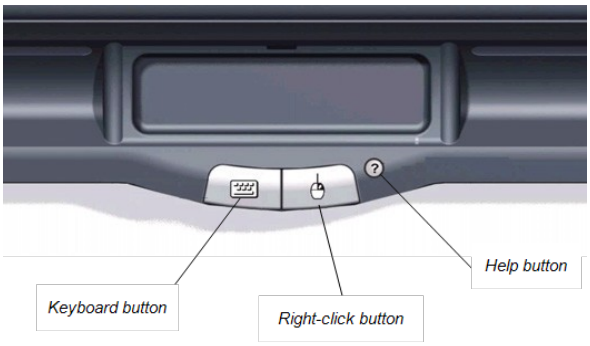

You can customize the buttons using SMART Product Drivers to provide several other functions, including printing, changing pages and capturing the screen. Pressing both buttons simultaneously starts the orientation process.

The third small, round button launches the online Help, where you'll also find an alignment icon for orienting your interactive whiteboard.

Pen tray LEDs and sensors

When you turn on or reset your interactive whiteboard, the indicator lights on the pen tray cycle twice. When the system is running, the lights come on only when you remove a tool. Only one illuminates at a time, indicating the last tool removed from the pen tray. The pen tray detects the removal of the pens and the eraser using reflective infrared sensors similar to the ones that detect the presence of paper in photocopiers.

NOTE

The pen tray tools must reflect infrared light. Old-style black SMART Board interactive whiteboard pens might not reflect infrared light reliably.

Cleaning the pen tray's sensors

If the infrared sensors in the bottom of your pen tray's recesses become obstructed by dirt, the sensors don't detect when you remove a pen or the eraser. The recessed LED doesn't illuminate, and the lifted tool doesn't work.

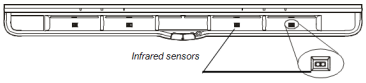

To clean a sensor, moisten a cotton swab with a household glass cleaner, such as Windex, and then carefully clean the infrared transmitter and receiver.

The ready light

You can see the Ready light in the lower-right corner of your interactive whiteboard's frame. The Ready light indicates the controller module's operating states.

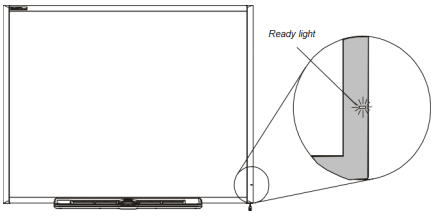

The following table shows the Ready light's normal states. If the indicator's behavior doesn't match a state listed here, refer to *Troubleshooting using the Ready light* on page 45.

Ready light state	Meaning
Solid red	Your interactive whiteboard is receiving power from the USB cable or an optional expansion module's power adapter, but your interactive whiteboard isn't communicating with a computer.

Ready light state	Meaning
Solid green	Your interactive whiteboard is receiving power and is communicating successfully with SMART Product Drivers.
Flashing green	Your interactive whiteboard is receiving power and is communicating successfully with the USB HID driver of your computer's operating system. **NOTE** In HID mode, interactive whiteboard tools such as the pens and the eraser don't work, but you can move the mouse pointer and perform mouse functions by touching the interactive screen. The Right-Click button on the pen tray might work, depending on the version of Windows operating system you're using. Neither the Keyboard nor the Help button will work.
Flashing or solid amber	The controller module is in a service mode or has detected a software error. Refer to *Troubleshooting using the Ready light* on page 45.

Chapter 5

Troubleshooting your interactive whiteboard

Adjusting the projected image 43
Resetting your interactive whiteboard 44
The Reset button 44
Troubleshooting using the Ready light 45
Flowchart 1: Getting started 46
Flowchart 2: Ready light not on 47
Flowchart 3: Ready light red 47
Flowchart 4: Ready light flashing green 48
Flowchart 5: Ready light steady green 50
Troubleshooting tips 50
Finding more information 52
Contacting SMART Technical Support 53

Adjusting the projected image

If your projector isn't installed in a fixed location, you can correct many image problems by shifting your projector or adjusting its zoom lens. Optimally, you should have a margin of approximately 3/8" (1 cm) on both the right and left sides of the screen. You can then adjust the zoom lens to display a focused image.

NOTES

- Don't adjust the image size and geometry based on your projector's splash screen. The splash screen image is much smaller than the computer's projected image. Before you adjust the projected image, make sure that you set the computer's resolution and refresh rate. See *Configuring your computer settings* on page 31.
- Complete the following steps only as required.

To adjust the projected image

1. If the left and right edges of the projected image aren't parallel, raise or lower your projector at the front or back until the edges are parallel.
2. If the top and bottom edges aren't parallel, turn the projector slowly until the edges are parallel.

3. Further adjust your projector using small, slow movements until you're satisfied with the projected image.
    - Correct the image's horizontal and vertical position by adjusting the height and position of the projector platform or stand.
    - Adjust the image laterally by sliding the projector to the left or right.
    - Adjust the image size by moving the projector forward or backward to increase or reduce the image size, until it correctly fills the screen.
4. Make fine adjustments to the image level and size according to your projector manufacturer's instructions.
5. Create a clear image by adjusting your projector's focus function.

Resetting your interactive whiteboard

If your interactive whiteboard behaves erratically or becomes unresponsive, possibly because of an electrostatic discharge, a power fade or interruption or some other event, you might be able to restore normal operation by resetting your interactive whiteboard.

Reset your interactive whiteboard by disconnecting and then reconnecting the USB cable, or by removing and replacing the power plug to the expansion module. This step turns the power off and back on, resetting all components of your product.

The Reset button

The Reset button on the side of your interactive whiteboard's controller module lets you reset the controller. The Reset button is recessed so that it can't be triggered accidentally. Use the tip of a pen tray pen or another pointed object, such as a ball-point pen, to press this button.

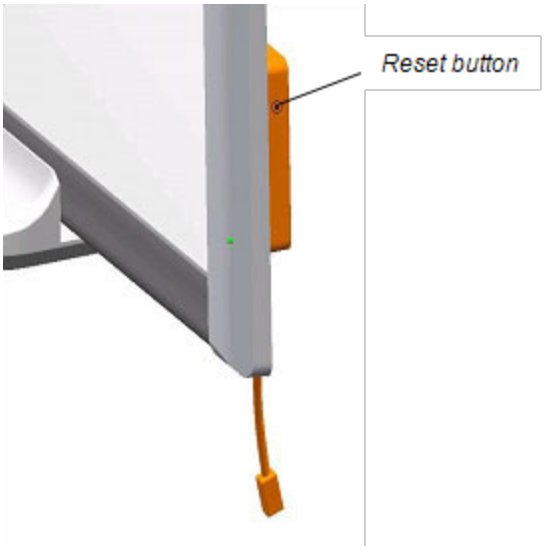

Press the Reset button if the controller module stops responding or is in the wrong mode. After you press the Reset button, the controller module resets and operates normally.

NOTE

Pressing and holding the Reset button for longer than three seconds clears any saved 4- or 9-point orientation data from the controller module's memory, and the alignment defaults to factory settings. Because 12- and 20-point orientation data is stored on your computer, however, this data is retained after a reset. See *Orienting your interactive whiteboard* on page 32.

Troubleshooting using the Ready light

If you experience a problem with your interactive whiteboard, troubleshoot it by using the Ready light, in conjunction with other observable symptoms and behaviors. Before you start troubleshooting, see *The ready light* on page 41 to locate the Ready light, and then familiarize yourself with its states during normal operation.

The following flowchart will help you to diagnose the issues and will direct you to the next stage in your troubleshooting process.

Flowchart 1: Getting started

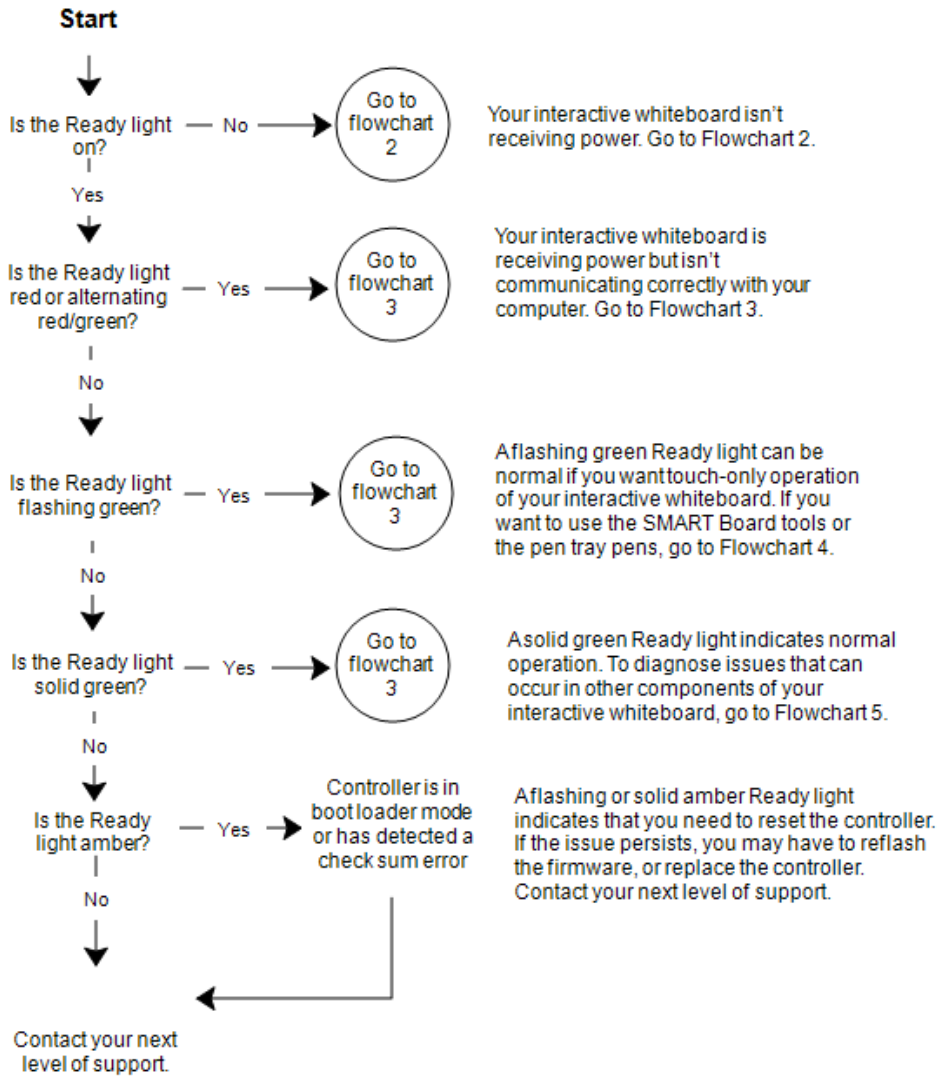

If none of these descriptions applies to the Ready light, contact your next level of support.

Flowchart 2: Ready light not on

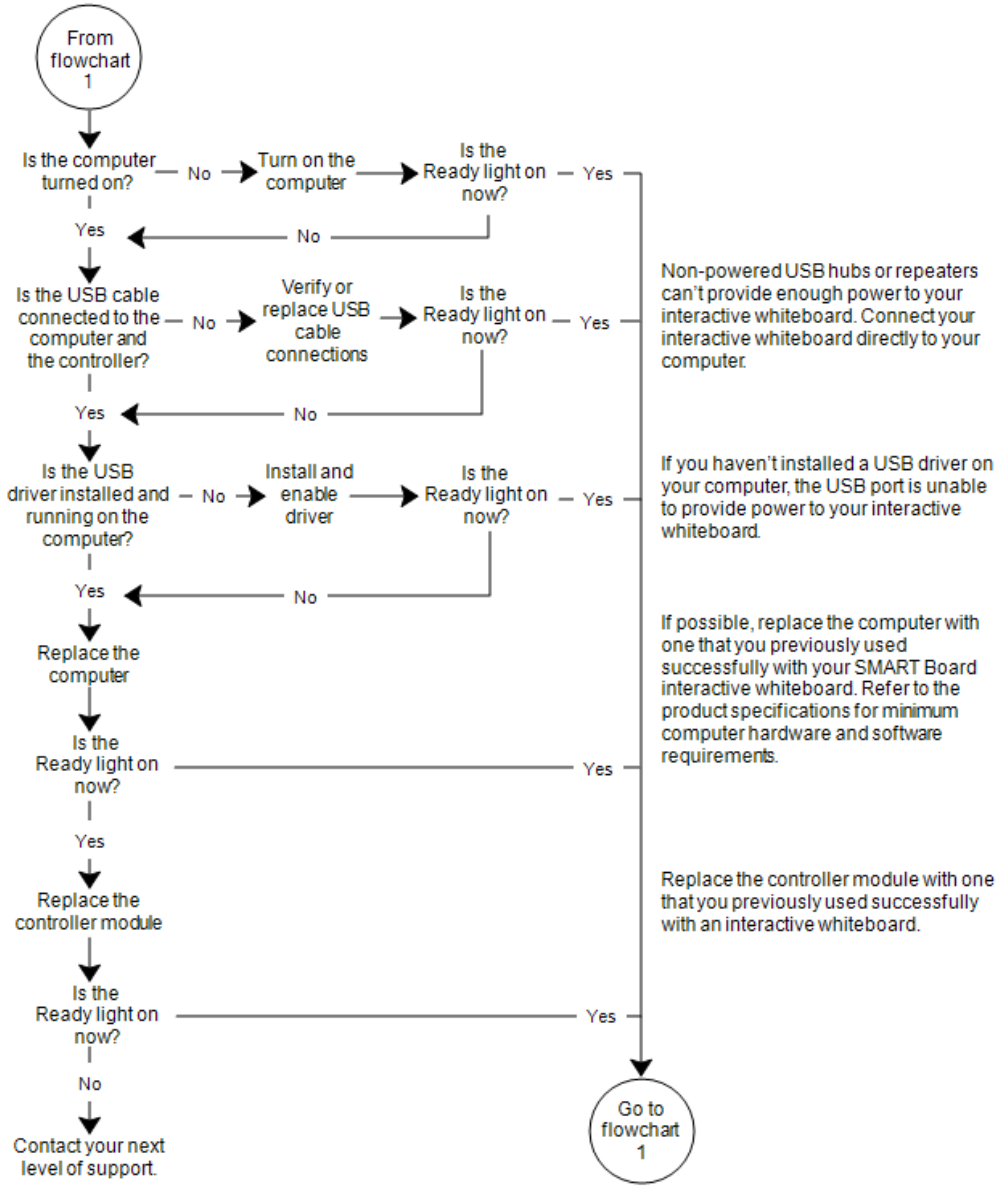

Flowchart 3: Ready light red

A red Ready light indicates that your interactive whiteboard is receiving power but isn't communicating with your computer. Pen tray LEDs don't turn on and the screen isn't responsive to touch.

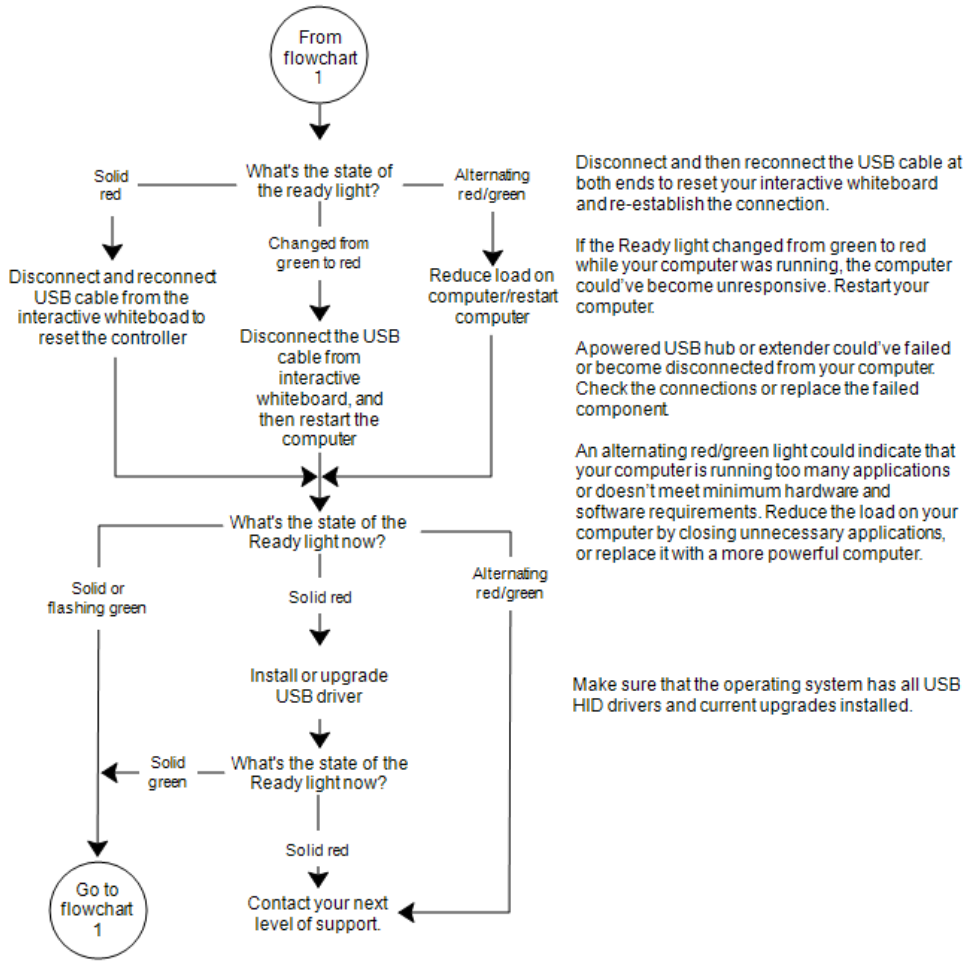

Flowchart 4: Ready light flashing green

NOTES

- This is the normal mouse mode state when SMART Product Drivers aren't installed on your computer.
- This mode can be useful for occasional or guest users who don't require the use of SMART Board tools or pen tray functions.

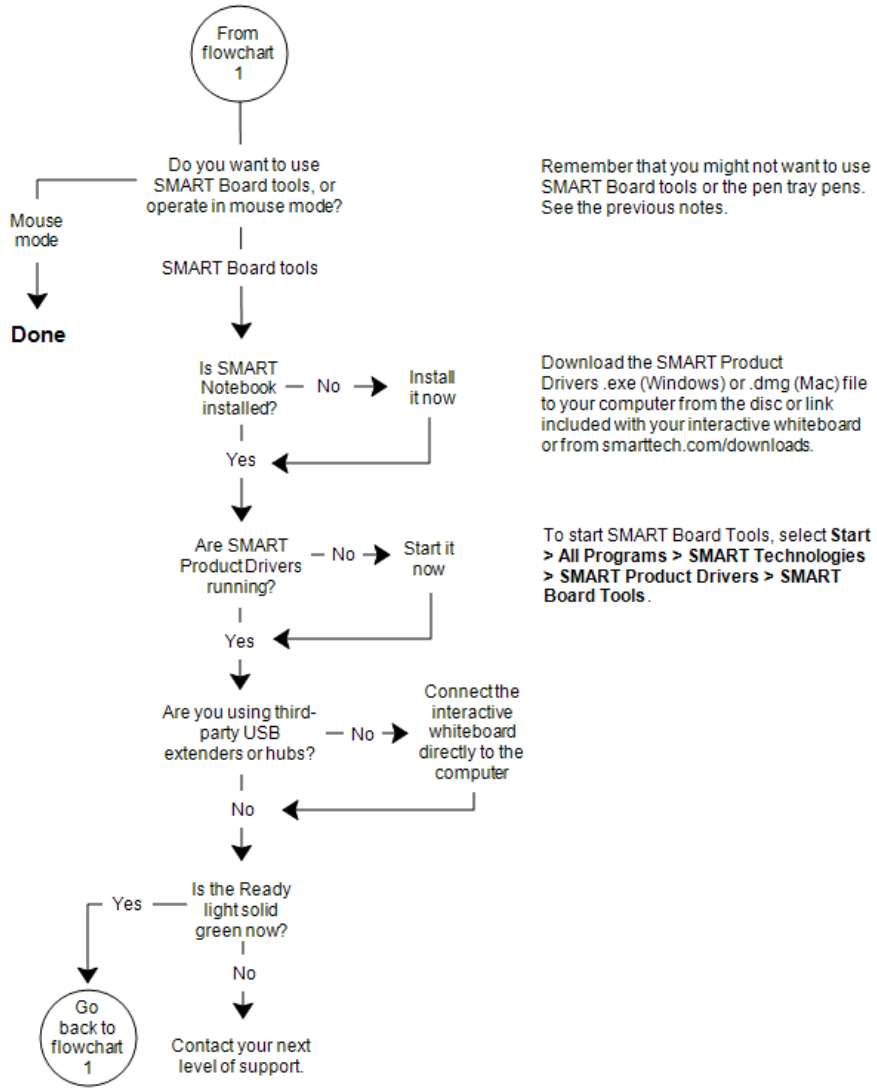

If your interactive whiteboard still isn't operating normally, contact SMART Technical Support at smarttech.com/contactsupport.

Flowchart 5: Ready light steady green

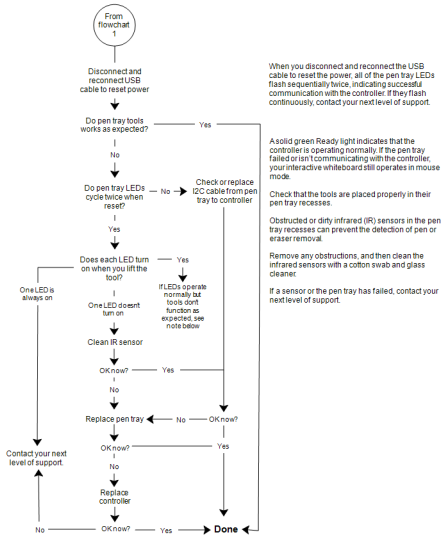

NOTE

If another user has reassigned the pen, eraser or pen tray button functions, you can return them to normal operation using the SMART control panel.

Troubleshooting tips

Try the troubleshooting tips in this table if the Ready light indicates that your interactive whiteboard is operating normally, but you're still experiencing problems.

Symptom/observation	Cause	Solution
There's no image projected on your interactive whiteboard's screen, or a "No Input" message appears.	Your projector isn't receiving a video signal.	• Check the video cable connections. • Check that the correct video input is selected on your projector. • Make sure that your projector is on and that it's connected to a power source. • If you're using a laptop computer, switch the external video connection on. Refer to your laptop's user's guide for more information.
	Your computer is in standby mode.	Move the mouse or touch any key on your keyboard to bring your computer out of standby mode.
	Your computer is off.	Turn on your computer (or press your computer's reset button), and then log on as usual.
The projected image is blurry, too large or doesn't completely fill your interactive whiteboard's screen.	Your projector's position, zoom and focus settings aren't adjusted.	Adjust your projector's position, zoom and focus settings. Refer to your projector's manual for more information.
	Your computer's video resolution settings don't match your projector's native resolution.	Consult your projector's manual for the correct video resolution, and then go to Windows Control Panel or Apple System Preferences to change the video resolution to match your projector.
The SMART software icon doesn't appear in the Windows notification area or the Mac Dock.	SMART Board Tools isn't running.	Start SMART Board Tools. For Windows computers, select **Start** > **All Programs** > **SMART Technologies** > **SMART Product Drivers** > **SMART Board Tools**. For Mac computers, select **Finder** > **Applications** > **SMART Product Drivers** > **SMART Board Tools**.
	SMART Product Drivers aren't installed.	Install SMART Product Drivers on your computer. For details about installing SMART Product Drivers, see *Installing SMART software* on page 30.

Symptom/observation	Cause	Solution
Touch isn't accurate. The pointer doesn't appear directly below your finger. When you write on the screen, your writing appears at a slight distance from the pen.	Your interactive whiteboard isn't oriented properly.	Orient your interactive whiteboard. To start the orientation, press and hold both the **Keyboard** and **Right-Click** buttons on the pen tray at the same time. See *Orienting your interactive whiteboard* on page 32.
No pointer is visible on the screen, and when you touch the screen, a colored line appears.	A pen is missing or isn't positioned properly in its pen tray recess.	Replace the missing pen.
	Your pen, dry erase marker, or old style (black) SMART pen doesn't reflect infrared light and the pen tray sensors are unable to detect it.	Wrap light-colored tape on the pen to make it more reflective.
The pointer snaps back to one location when you lift the pen or your finger from the screen.	The resistive surfaces are in constant contact at the location to which the pointer returns. An object that hits or presses on the front sheet, leaving a permanent depression, can cause this issue.	Gently pull the front sheet away from the back sheet using a piece of tape or a small suction cup. If the problem goes away while you pull but returns when you release the tape or suction cup, you might have to return your interactive whiteboard for repair.
The pointer moves erratically or gaps appear when you draw with the pen.	The USB power from your laptop, computer or USB extender is too low to power your interactive whiteboard.	Substitute another computer. OR Eliminate or substitute the USB extender. OR Install a powered USB hub.

Finding more information

The Help Center contains links to a wide range of information, including procedures, concepts, help with applications, SMART tool descriptions, troubleshooting hints and more.

Access the Help Center by pressing the Help button on the pen tray. The Help button also provides access to the orientation screen and SMART contact information. For more information on the pen tray buttons, see *Pen tray buttons* on page 40. Alternatively, access the Help Center from the SMART software icon in the Windows notification area or Mac Dock.

For more information, go to smarttech.com/training for free learning resources, hands-on lessons and information on how to get more training.

Contacting SMART Technical Support

SMART Technical Support welcomes your call. However, if you experience difficulty with your SMART product, you might want to contact your authorized SMART reseller first. Your local reseller might be able to resolve the issue without delay.

Before contacting SMART Technical Support, make note of your SMART Board interactive whiteboard's serial number, and then note it in the inside cover of this manual (if you printed it).

To determine your interactive whiteboard's serial number

1. You can find the serial number in two places: on the back of your SMART Board interactive whiteboard, and on the bottom, right-hand edge of your interactive whiteboard's frame (the side) or on the bottom of the right-hand end of the frame.

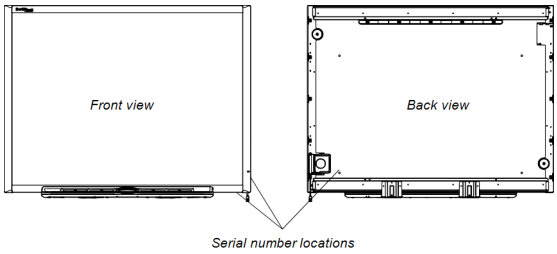

The serial number on your SMART Board interactive whiteboard always begins with the letters SB, followed by the interactive whiteboard's model number, for example, D685-xxxxxx. The serial number can include numbers, letters, and hyphens.

NOTE

If you're unable to locate the serial number for your interactive whiteboard, you can remove the pen tray to locate your serial number. For instructions on how to remove the pen tray, see .

Appendix A

Hardware environmental compliance

SMART Technologies supports global efforts to ensure that electronic equipment is manufactured, sold and disposed of in a safe and environmentally friendly manner.

Waste Electrical and Electronic Equipment regulations (WEEE directive)

Waste Electrical and Electronic Equipment regulations apply to all electrical and electronic equipment sold within the European Union.

When you dispose of any electrical or electronic equipment, including SMART Technologies products, we strongly encourage you to properly recycle the electronic product when it has reached the end of its life. If you require further information, contact your authorized SMART reseller or SMART Technologies for information on which recycling agency to contact.

Restriction of Certain Hazardous Substances (RoHS directive)

This product meets the requirements of the European Union's Restriction of Certain Hazardous Substances (RoHS) Directive 2002/95/EC.

Consequently, this product also complies with other regulations that have arisen in various geographical areas, and that reference the European Union's RoHS directive.

Packaging

Many countries have regulations restricting the use of certain heavy metals in product packaging. The packaging used by SMART Technologies to ship products complies with applicable packaging laws.

China's Electronic Information Products regulations

China regulates products that are classified as EIP (Electronic Information Products). SMART Technologies products fall under this classification and meet the requirements for China's EIP regulations.

U.S. *Consumer Product Safety Improvement Act*

The United States has enacted the *Consumer Product Safety Improvement Act* which limits the lead (Pb) content in products used by children. SMART Technologies is committed to complying with this initiative.

SMART TECHNOLOGIES

smarttech.com/support

smarttech.com/contactsupport

smarttech.com/kb/001414