SMART Board™ V280 Interactive Whiteboard

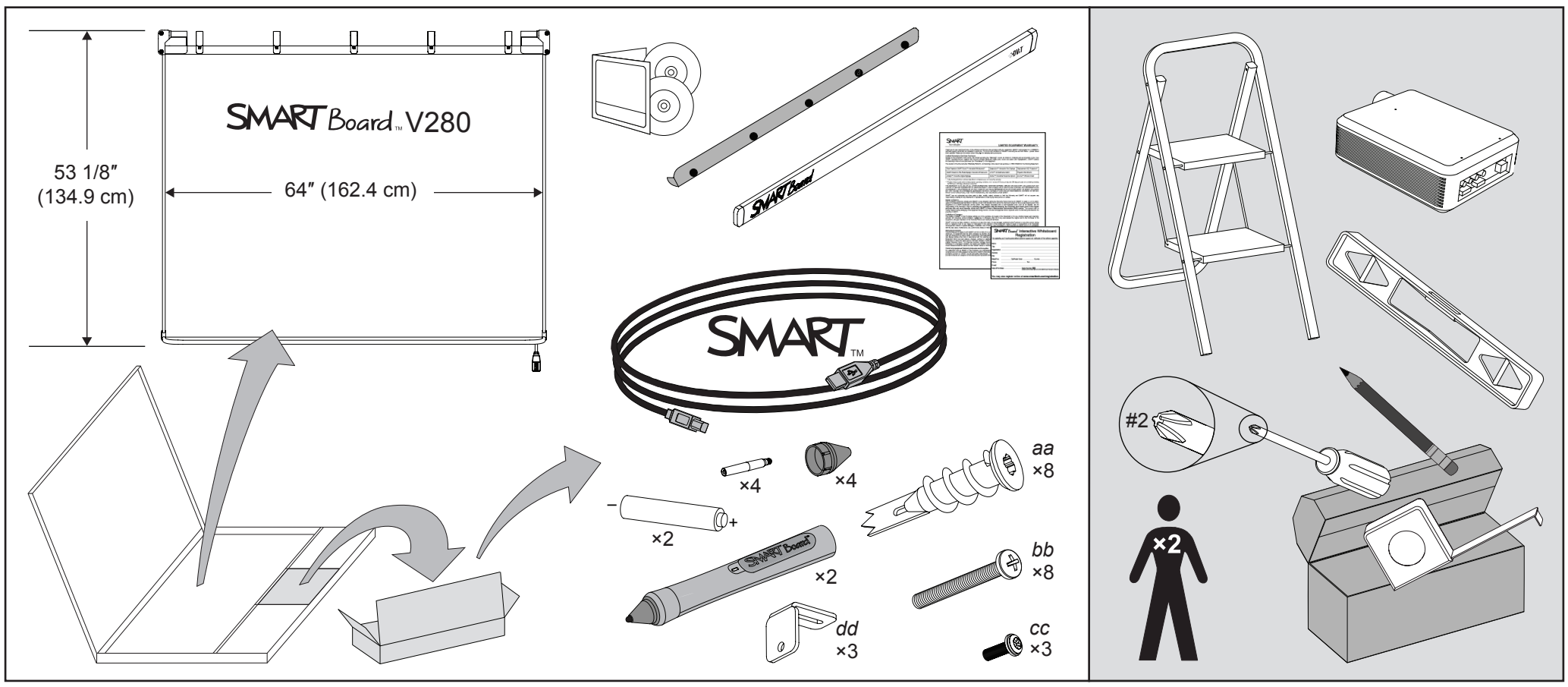

IMPORTANT

Important product warnings and cautions are contained in the *SMART Board V280 Interactive Whiteboard Installation and User's Guide*, document 122239 at *www.smarttech.com/support*.

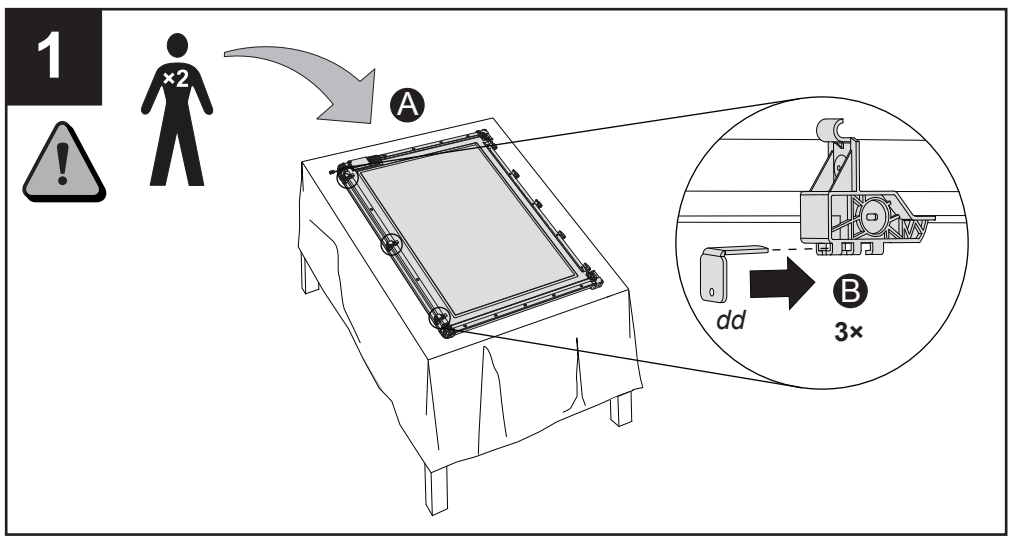

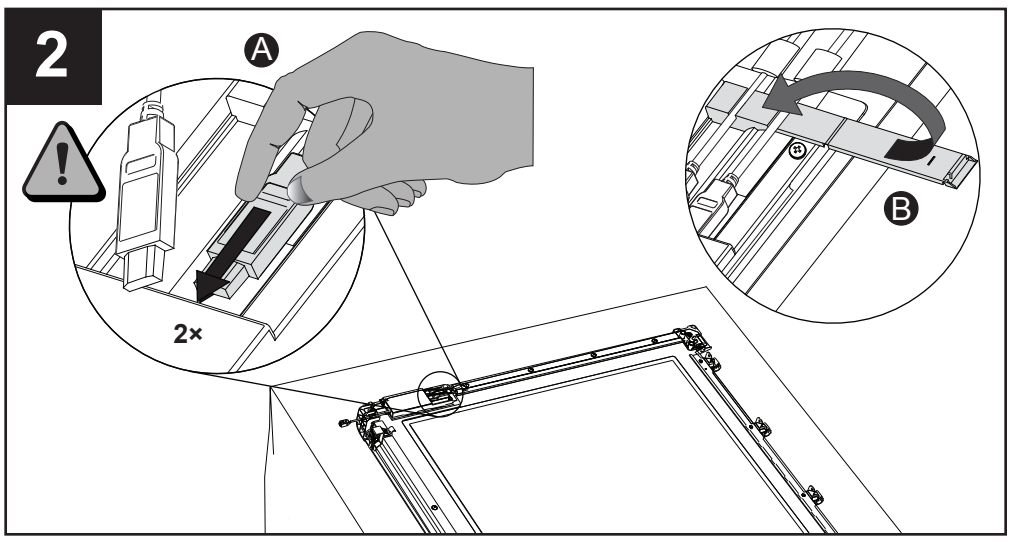

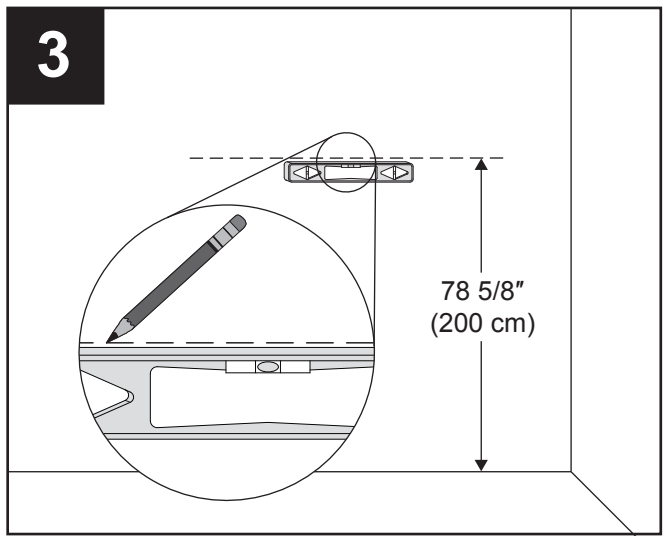

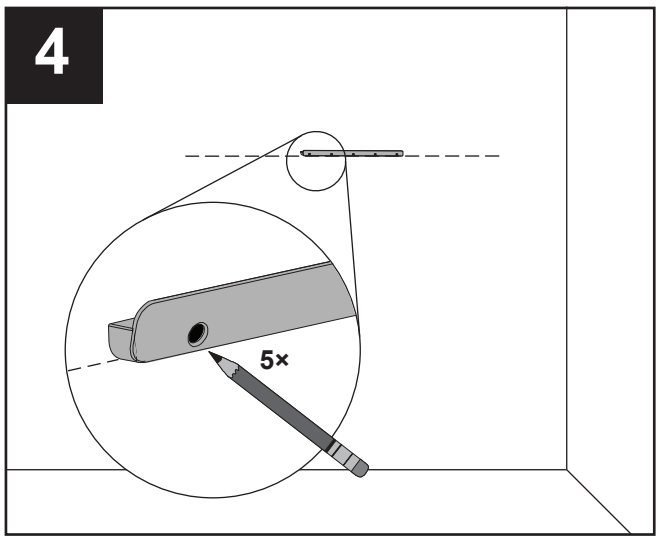

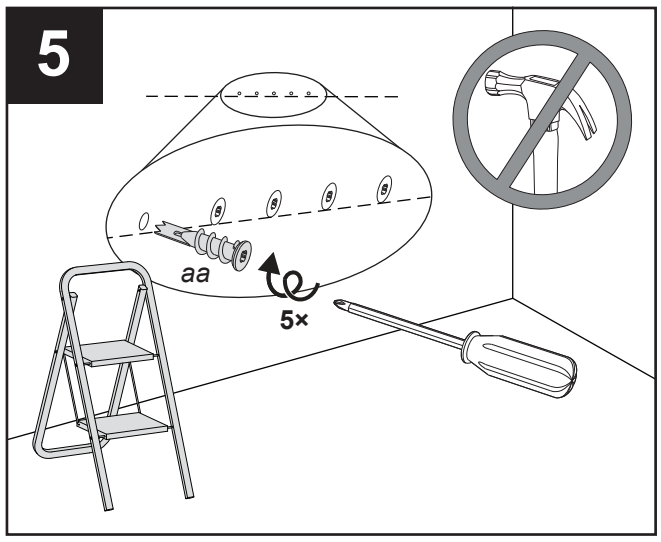

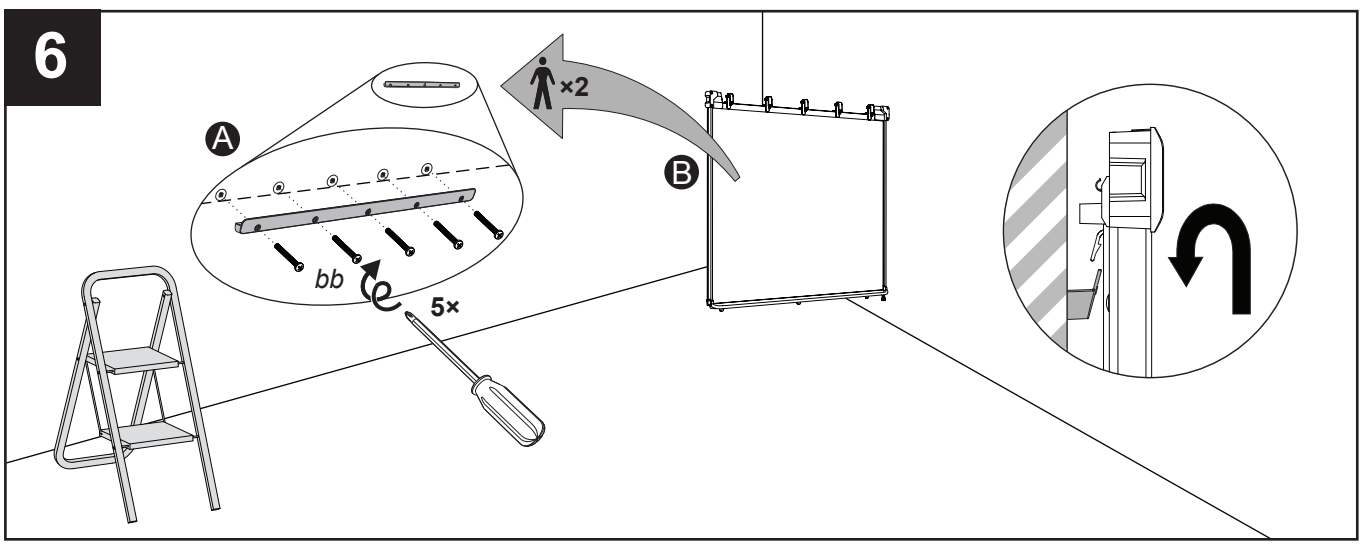

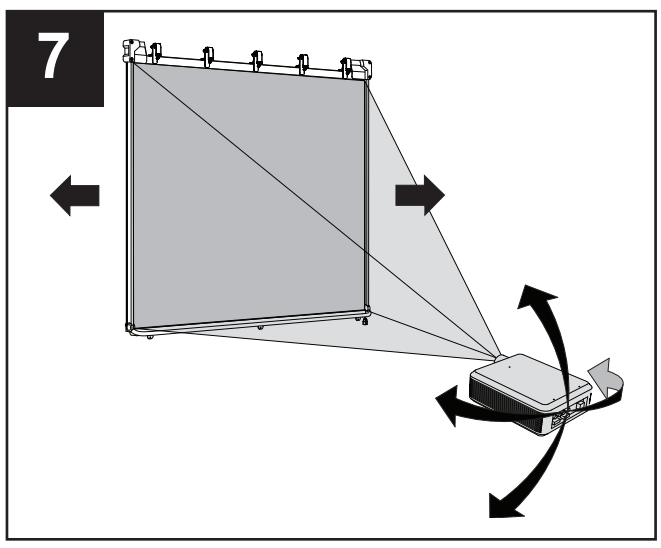

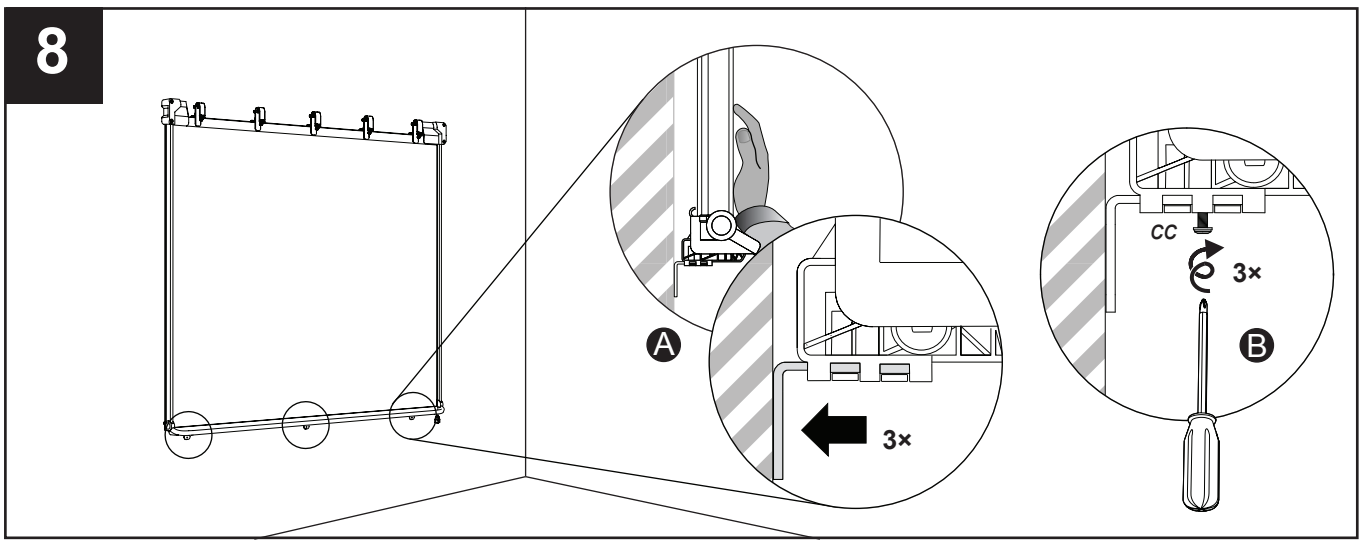

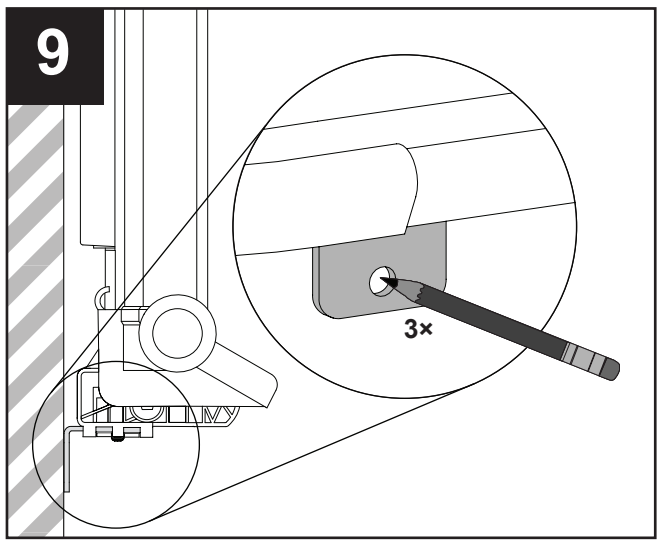

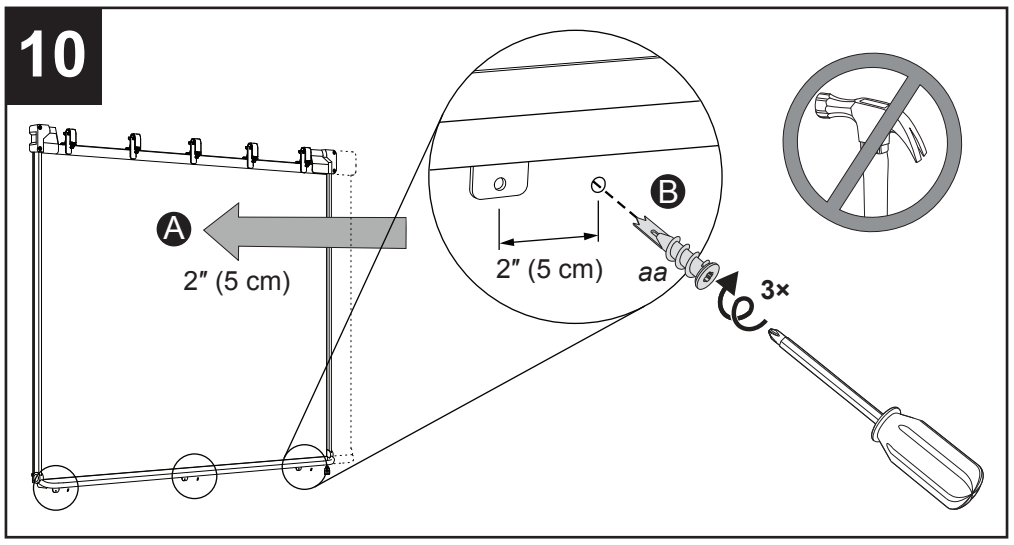

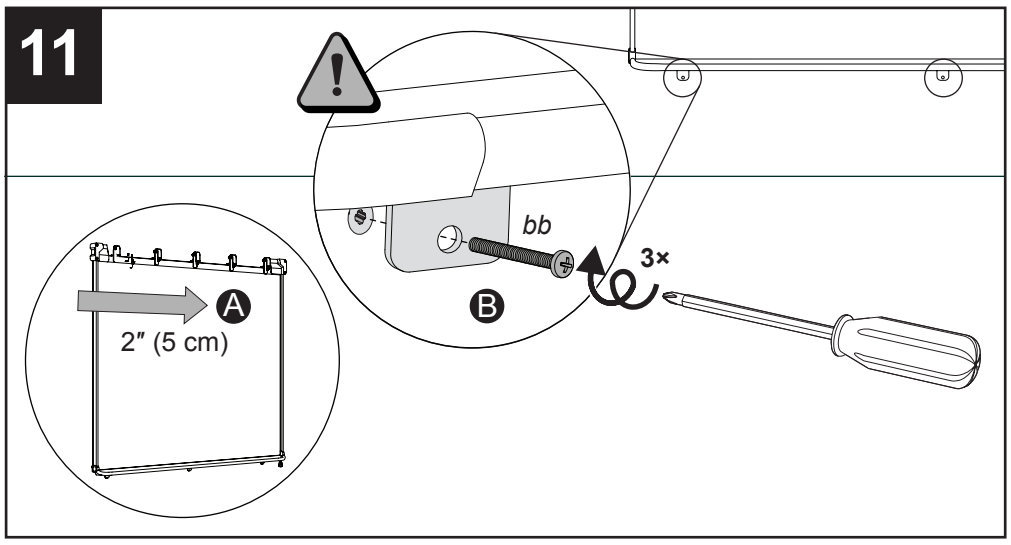

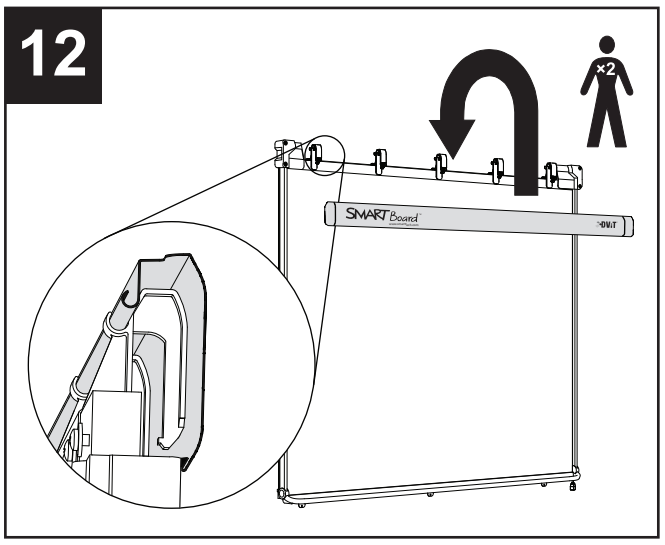

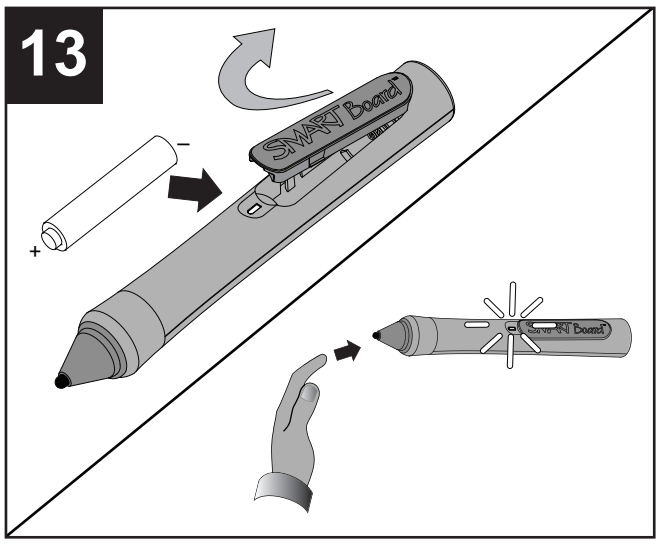

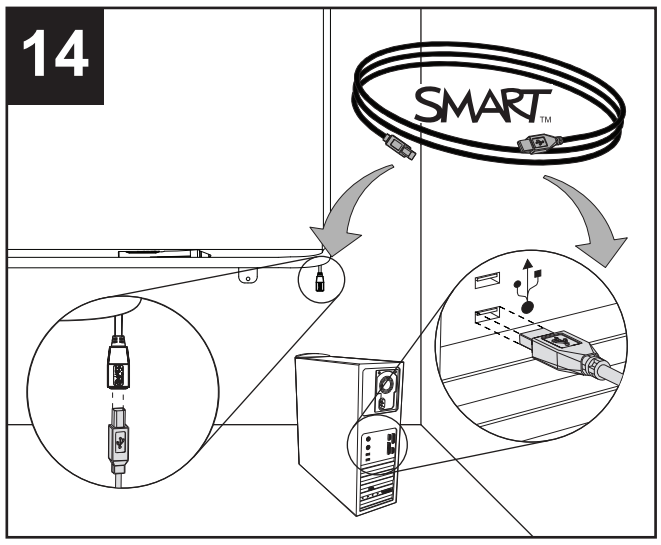

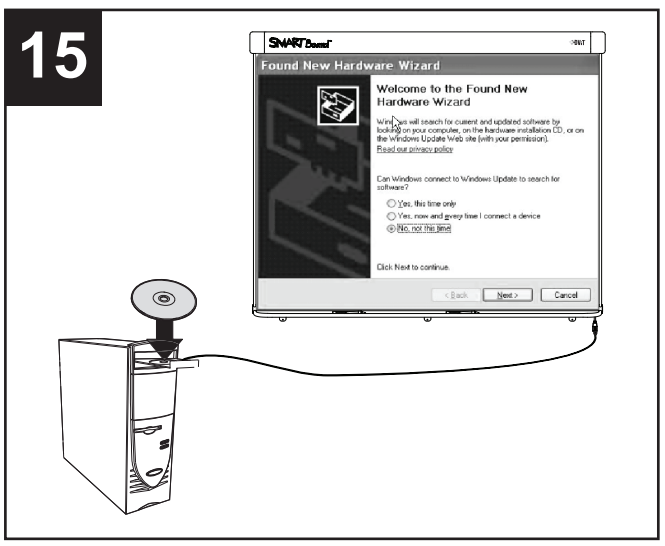

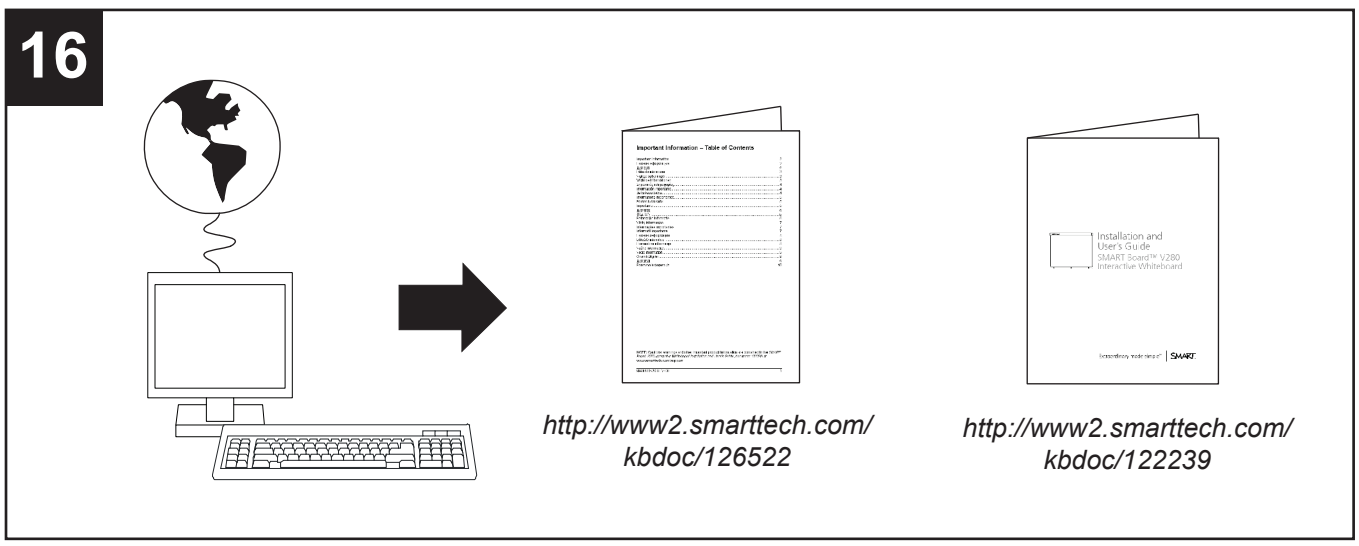

Hardware Environmental Compliance

SMART Technologies supports global efforts to ensure that electronic equipment is manufactured, sold and disposed of in a safe and environmentally friendly manner.

Waste Electrical and Electronic Equipment Regulations (WEEE Directive)

Waste Electrical and Electronic Equipment regulations apply to all electrical and electronic equipment sold within the European Union. When you dispose of any electrical or electronic equipment, including SMART Technologies products, we strongly encourage you to properly recycle the electronic product when it has reached end of its life. If you require further information, please contact your reseller or SMART Technologies for information on which recycling agency to contact.

Restriction of Certain Hazardous Substances (RoHS Directive)

This product meets the requirements of the European Union's Restriction of Certain Hazardous Substances (RoHS) Directive 2002/95/EC. Consequently, this product also complies with other regulations that have arisen in various geographical areas, and that reference the European Union's RoHS directive.

Packaging

Many countries have regulations restricting the use of certain heavy metals in product packaging. The packaging used by SMART Technologies to ship products complies with packaging laws.

China's Electronic Information Products Regulations

China regulates products that are classified as EIP (Electronic Information Products). SMART Technologies products fall under this classification and meet the requirements for China's EIP regulations.

U.S. Consumer Product Safety Improvement Act

The United States has enacted the Consumer Product Safety Improvement Act which limits the lead (Pb) content in products. SMART Technologies is committed to complying with this initiative.

www.smarttech.com/support www.smarttech.com/contactsupport
Support +1.403.228.5940 or Toll Free 1.866.518.6791 (U.S./Canada)

© 2008–2009 SMART Technologies ULC. All rights reserved. SMART Board, smarttech and the SMART logo are trademarks or registered trademarks of SMART Technologies ULC in the U.S. and/or other countries.
Patent No. US5448263; US6141000; US6320597; US6326954; US6337681; US6741267; US6747636; US6803906; US6947032; US6954197; US7151533; US7184030; US7236162; US7289113; US7499033; CA2058219; CA2252302; EP1297488; ES2279823; ZL0181236.0; and DE60124549. Other patents pending. Contents are subject to change without notice. 07/2009.

99-00815-20 REV E0