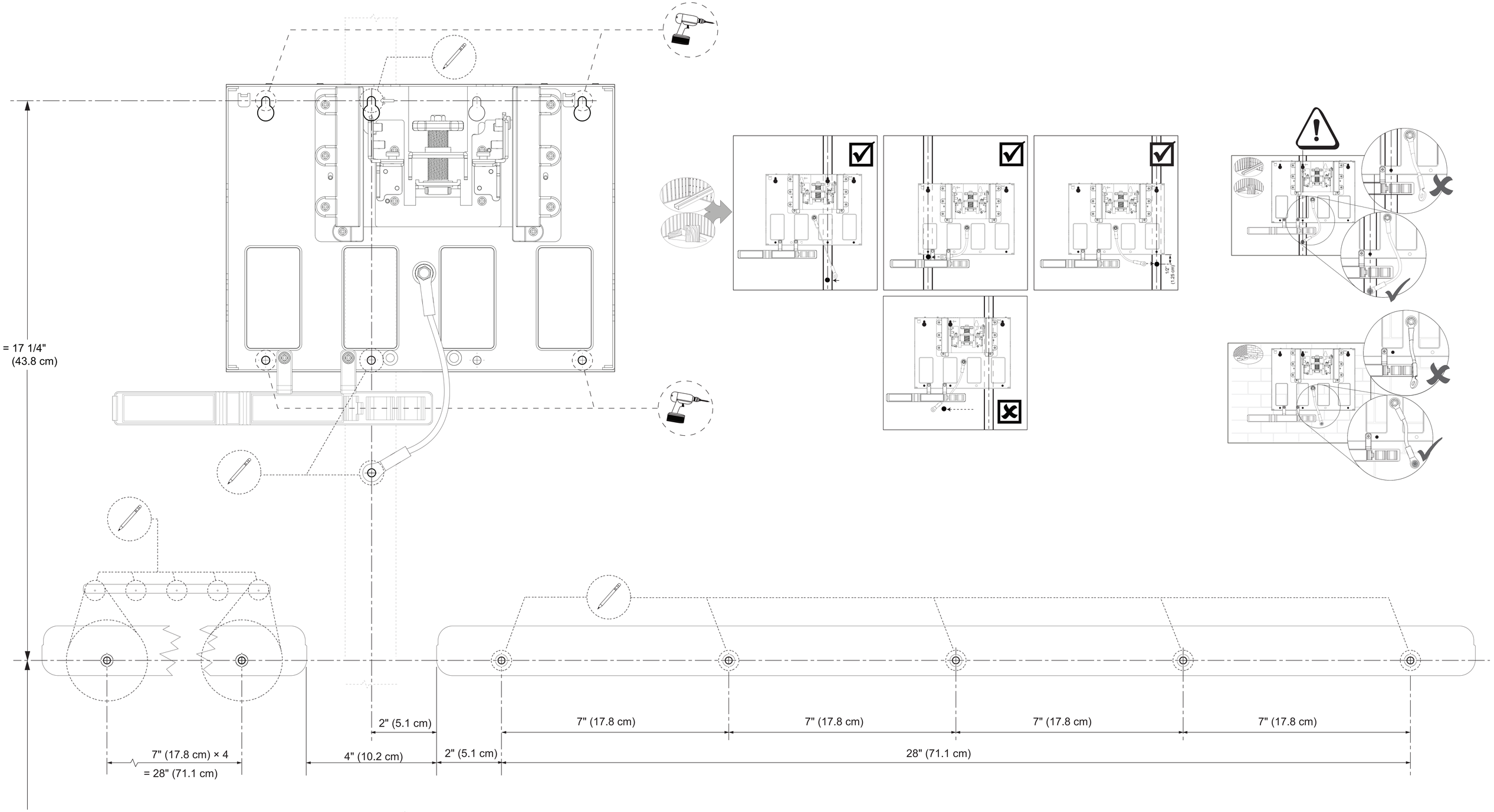

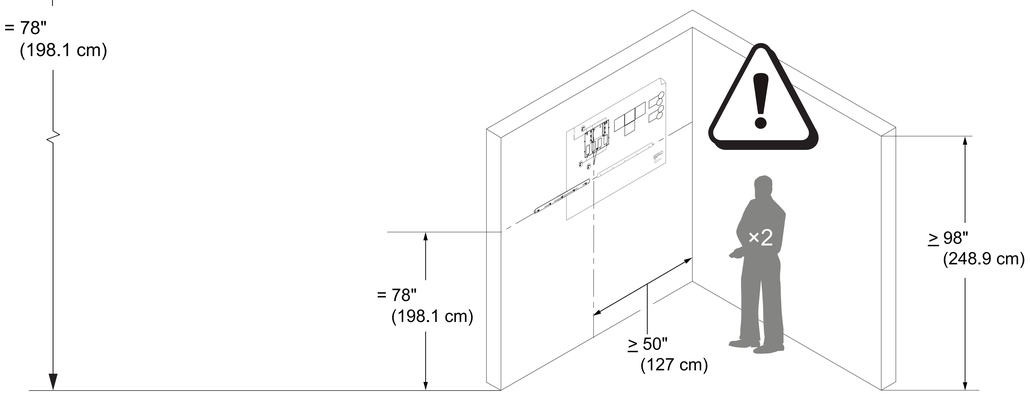

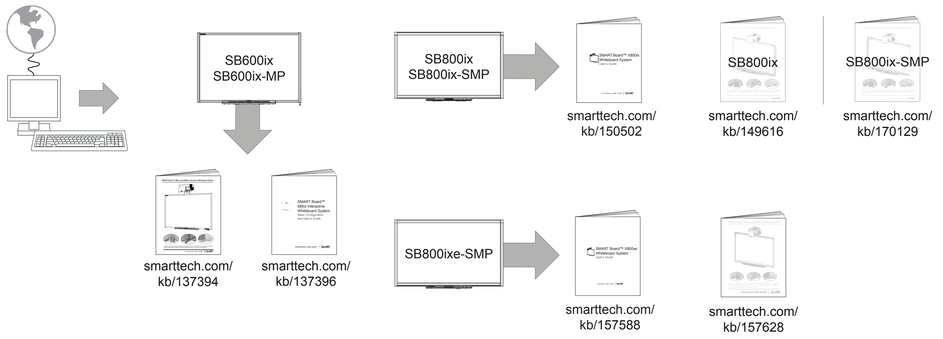

SMART UX60 projector system installation template

smarttech.com/support smarttech.com/contactsupport
Support +1.403.228.5940 or Toll Free 1.866.518.6791 (U.S./Canada)

© 2010–2011 SMART Technologies ULC. All rights reserved. The SMART logo, smartboard and all SMART taglines are trademarks or registered trademarks of SMART Technologies ULC in the U.S. and/or other countries. All third-party product and company names may be trademarks of their respective owners. One or more of the following patents: US6540366; US7626594; Other patents pending. Contents are subject to change without notice. 12/2011.

1016955 Rev 01

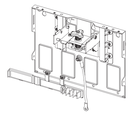

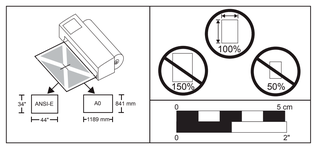

You are permitted to make copies of this document
at 100% scale and distribute the copies for use.