smarttech.com/docfeedback/170814

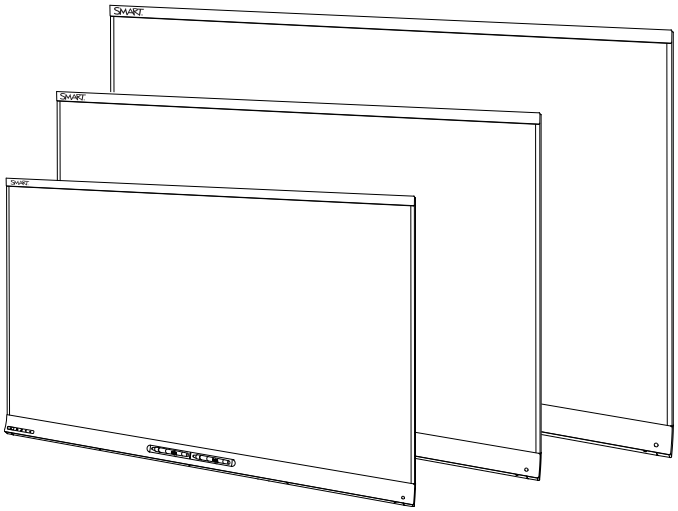

SMART Board® 8000i-G5-SMP series
interactive flat panels

ADMINISTRATOR'S GUIDE

FOR MODELS SBID8055i-G5-SMP, SBID8065i-G5-SMP, SBID8065i-G5-SMP-V2 AND SBID8075i-G5-SMP

Product registration

If you register your SMART product, we'll notify you of new features and software upgrades.

Register online at smarttech.com/registration.

Keep the following information available in case you need to contact SMART Support.

Serial number: _____

Date of purchase: _____

この装置は、クラスA情報技術装置です。この装置を家庭環境で使用すると電波妨害を引き起こすことがあります。この場合には使用者が適切な対策を講ずるよう要求されることがあります。

VCCI-A

Licenses

The terms HDMI and HDMI High-Definition Multimedia Interface, and the HDMI logo are trademarks or registered trademarks of HDMI Licensing LLC in the United States and other countries.

Trademark notice

SMART Board, SMART kapp iQ, SMART Ink, SMART Meeting Pro, DVIT, Pen ID, smarttech, the SMART logo and all SMART taglines are trademarks or registered trademarks of SMART Technologies ULC in the U.S. and/or other countries. All third-party product and company names may be trademarks of their respective owners.

Copyright notice

© 2015–2016 SMART Technologies ULC. All rights reserved. No part of this publication may be reproduced, transmitted, transcribed, stored in a retrieval system or translated into any language in any form by any means without the prior written consent of SMART Technologies ULC. Information in this manual is subject to change without notice and does not represent a commitment on the part of SMART.

This product and/or use thereof is covered by one or more of the following U.S. patents:

www.smarttech.com/patents

09/2016

smarttech.com/kb/170814

Important information

WARNING

- Failure to follow the installation instructions shipped with the interactive flat panel could result in injury and product damage which may not be covered by the warranty.
- Do not open or disassemble the interactive flat panel. You risk electrical shock from the high voltage inside the casing. Opening the casing also voids the warranty.
- Do not stand (or allow children to stand) on a chair to touch the surface of the interactive flat panel. Rather, mount the product at the appropriate height.
- To reduce the risk of fire or electric shock, do not expose the interactive flat panel to rain or moisture.
- If the interactive flat panel requires replacement parts, make sure the service technician uses replacement parts specified by SMART Technologies or parts with the same characteristics as the original.
- Ensure that any cables that cross the floor to the interactive flat panel are properly bundled and marked to avoid a trip hazard.
- Do not insert objects inside the cabinet ventilation holes, because they could touch dangerous voltage points and cause electric shock, fire or product damage which may not be covered by the warranty.
- Do not place heavy objects on the power cable. Damage to the cable could cause shock, fire or product damage which may not be covered by the warranty.
- Use only extension cords and outlets that can fully accommodate the interactive flat panel's polarized plug.
- Use the power cable provided with the interactive flat panel. If a power cable is not supplied, contact your supplier. Use only power cables that match the AC voltage of the power outlet and that comply with your country's safety standards.
- If the glass is broken, do not touch the liquid crystal. To prevent injury, handle glass fragments with care when disposing of them.
- Do not move or mount the interactive flat panel by connecting rope or wire to its handles. The interactive flat panel is heavy, and failure of the rope, wire or handle could lead to injury.

- Use only VESA®-approved mounting hardware.
- Disconnect all of the interactive flat panel's power cables from the wall outlet and seek assistance from qualified service personnel if any of the following occur:
  - The power cable or plug is damaged
  - Liquid is spilled into the interactive flat panel
  - Objects fall into the interactive flat panel
  - The interactive flat panel is dropped
  - Structural damage, such as cracking, occurs
  - The interactive flat panel behaves unexpectedly when you follow operating instructions
- The pens on this product use an adhesive containing nonylphenol ethoxylate, a candidate substance of very high concern under the EU REACH Regulation (EC) 1907/2006.

تستخدم الأقلام الموجودة في هذا المنتج مادة لاصقة تحتوي على نونيلفينول إيثوكسيلات، وهي مادة مرشحة أن يكون لها خطورة كبيرة وفقًا للائحة REACH للاتحاد الأوروبي رقم (EC) 1907/2006.

Las plumas de este producto utilizan un adhesivo que contiene etoxilato de nonilfenol, una sustancia candidata de muy alto riesgo según el Reglamento REACH de la UE (CE) 1907/2006.

Pera na tomto produktu využívají lepidlo obsahující nonylfenol ethoxylát, což je dle nařízení (ES) REACH 1907/2006 látka vzbuzující mimořádné obavy.

Pennene på dette produkt anvender et klæbemiddel der indeholder nonylphenolethoxylat, et stof der er særligt problematiske under EU REACH forordningen (EF) 1907/2006.

Die Stifte dieses Produkts verwenden einen Klebstoff mit Nonylphenolethoxylat, einem Stoff der nach Artikel 59 der Verordnung (EG) Nr. 1907/2006 (REACH) auf der Liste der Stoffe mit einem beträchtlichen Risiko steht.

Οι πένες αυτού του προϊόντος χρησιμοποιούν μια κολλητική ουσία που περιέχει αιθοξυλιωμένη εννεϋλοφαινόλη, μια υποψήφια ουσία που προκαλεί πολύ μεγάλη ανησυχία σύμφωνα με τον Κανονισμό REACH της ΕΕ (ΕΚ) 1907/2006.

Los rotuladores de este producto emplean un adhesivo que contiene etoxilato de nonilfenol, una sustancia candidata de gran preocupación según la regulación REACH de la UE (CE) 1907/2006.

이 제품의 펜은 EU REACH Regulation (EC) 1907/2006에 의해 고위험성우려 후보물질로 지정된 노닐페놀 에톡시레이트가 함유된 접착제를 사용합니다.

Voor de stiften in dit product wordt gebruik gemaakt van een kleefstof met nonylfenolethoxylaat, een zeerzorgwekkende stof op dekandidaatslijst volgens de Europese REACH-richtlijn (EG) 1907/2006.

Pennene som følger med dette produktet bruker et klebestoff som inneholdernonylfenoloksetylat, et stoff det er ytret stor bekymring for iEU REACH Regulation (EC) 1907/2006.

Pióra na tym produkcie używają kleju zawierającego etoksylan nonylofenolu, substancję z listy kandydackiej wzbudzającą duże obawy na mocy unijnego Rozporządzenia REACH (WE) 1907/2006.

As canetas neste produto usam um adesivo contendo nonilfenol etoxilado, uma substância candidata que suscita elevada preocupação no âmbito do regulamento EU REACH (EC) 1907/2006.

В пишущих ручках данного изделия используется клей, содержащий оксиэтилированный нонилфенол—кандидат на включение в списки особо опасных веществ в соответствии с Регламентом ЕС относительно правил регистрации, оценки, санкционирования и ограничения использования химических веществ (REACH) 1907/2006.

Tämän tuotteen kynissä on liimaa, joka sisältää nonyylifenolietoksylaattia, joka on erityinen huolenaihe EU REACH-asetuksen (EY) 1907/2006 mukaan.

Les crayons de ce produit utilisent un adhésif contenant des éthoxylates de nonylphénol, substance extrêmement préoccupante en vertu du règlement REACH de l'UE (CE) 1907/2006.

Ezen a terméken a tollak egy nonil-fenol-etoxilátot tartalmazó ragasztót használnak. Ez az anyag az 1907/2006/EK REACH-rendelet értelmében különös aggodalomra okot adó.

Le penne di questo prodotto utilizzano un adesivo contenente etossilato di nonilfenolo, una sostanza candidata estremamente problematica ai sensi del regolamento REACH dell'UE (CE) 1907/2006.

この製品のペンには、EUのREACH規則（EC）No 1907/2006で定められている高懸念物質候補であるノニルフェノールエトキシレートを含む接着剤が使用されています。

Pisala na tem izdelku uporabljajo lepilo, ki vsebuje nonilfenol etoksilat, ki se uvršča med snovi, ki morda vzbujajo zelo veliko skrb v skladu z Uredbo EU (ES) 1907/2006 REACH.

De inkluderade pennorna för denna produkt använder ett bindemedel som innehållernonylfenoletoxylat, som är föremål för bekymmer enligt EU REACH förordning (EG) 1907/2006.

Bu üründeki kalemler, AB REACH Yönetmeliği(EC) 1907/2006 uyarınca son derece endişe uyandıran madde adayı nonilfenol etoksilat içeren bir yapıştırıcıyı kullanmaktadır.

本产品所用之墨笔采用之黏胶含有壬基酚聚氧乙烯醚（nonylphenol ethoxylate），根据欧盟REACH法规（EC）1907/2006，此化学物为极受关切化学物名单上之候选化学物之一。

本產品所用之墨筆採用之黏膠含有壬基酚聚氧乙烯醚（nonylphenol ethoxylate），根據歐盟 REACH 法規（EC）1907/2006，此化學物為極受關切化學物名單上之候選化學物之一。

CAUTION

- Before you clean the interactive flat panel's screen, shut down or disconnect the computer. Otherwise, you may scramble the desktop icons or inadvertently activate applications when you wipe the screen.
- Avoid setting up and using the interactive flat panel in an area with excessive levels of dust, humidity and smoke.
- Dust buildup on the camera windows and reflective tape will degrade touch performance. SMART recommends that you inspect the camera windows and reflective tape for buildup and clean weekly.
- Make sure an electrical socket is near the interactive flat panel and remains easily accessible during use.
- The interactive flat panel should be used only with European TN and TT power distribution systems.

  It is not suitable for older, IT-type power distribution systems found in some European countries. "This system (IT-type) is widely used isolated from earth, in some installations in France, with impedance to earth, at 230/400V, and in Norway, with voltage limiter, neutral not distributed, at 230V line-to-line." (IEC 60950:1999)

  Contact qualified personnel if you're uncertain of the type of power system available where you're installing the interactive flat panel.

- The accessory slot's maximum available power is 60 W. The slot is not a limited power source. To reduce the risk of fire, make sure that accessories connecting to the slot satisfy the fire enclosure requirements of IEC 60950-1.
- You must connect the USB cable that came with the interactive flat panel to a computer that has a USB compliant interface and that bears the USB logo. In addition, the USB source computer must be compliant with CSA/UL/EN 60950 and bear the CE mark and CSA and/or UL Mark(s) for CSA/UL 60950. This is for operating safety and to avoid damage to the interactive flat panel.

IMPORTANT

- The following are the maximum power requirements for the interactive flat panel (including the power requirements for the accessory slot):

Model	Power requirements
SBID8055i-G5-SMP	90V to 240V AC, 50 Hz to 60 Hz, 134 W
SBID8065i-G5-SMP	100V to 240V AC, 50 Hz to 60 Hz, 199 W
SBID8065i-G5-SMP-V2	100V to 240V AC, 50 Hz to 60 Hz, 189 W
SBID8075i-G5-SMP	100V to 240V AC, 50 Hz to 60 Hz, 315 W

- For additional requirements and other information, refer to the interactive flat panel's specifications (see *Resources for decision makers* on page 10).

Contents

Important information i

Chapter 1: Welcome 1

About this guide 1
About the interactive flat panel 2
About SMART software 9
Resources for administrators 10
Resources for others 10

Chapter 2: Mounting the interactive flat panel 13

Before mounting the interactive flat panel 13
Mounting the interactive flat panel vertically 15
Mounting multiple interactive flat panels 15
Choosing a location 15
Choosing a height 16

Chapter 3: Connecting power and devices 17

SMART Board 8055i-G5-SMP and 8065i-G5-SMP connector panel 17
SMART Board 8065i-G5-SMP-V2 and 8075i-G5-SMP connector panel 18
Connecting power 19
Connecting the room computer 20
Connecting cables for a guest laptop 21
Connecting external speakers 22

Chapter 4: Setting up the interactive flat panel and room computer 23

Turning on the interactive flat panel and room computer for the first time 23
Installing SMART Meeting Pro software 24
Running the SMART Connection Wizard 24
Switching between input sources 24
Displaying multiple input sources 25

Chapter 5: Maintaining the interactive flat panel 27

Resetting the interactive flat panel 27
Updating firmware and software 28
Using SMART Settings 29
Cleaning and maintaining the interactive flat panel 32
Removing and transporting the interactive flat panel 35

Chapter 6: Troubleshooting 37

Resolving issues with the interactive flat panel 37

Using SMART software to resolve issues 41

Appendix A: Using the on-screen display menu 43

Changing settings in the on-screen display menu 44
SMART Board 8055i-G5-SMP and 8065i-G5-SMP on-screen display menu 44
SMART Board 8065i-G5-SMP-V2 and 8075i-G5-SMP on-screen display menu 48

Appendix B: Remotely managing the interactive flat panel 53

Connecting a computer to the interactive flat panel 53
Configuring the computer's serial interface settings 54
Power modes 55
Commands and responses 55
SMART Board 8055i-G5-SMP and 8065i-G5-SMP command inventory 57
SMART Board 8065i-G5-SMP-V2 and 8075i-G5-SMP command inventory 63

Appendix C: Hardware environmental compliance 73

Waste Electrical and Electronic Equipment (WEEE) 73
More information 73

Index 75

Chapter 1

Welcome

About this guide ... 1
About the interactive flat panel ... 2
- Models ... 2
- Specifications ... 2
- Features ... 3
- Components ... 4
  - Screen ... 5
  - Cameras and reflective tape channel ... 5
  - Front control panel ... 6
  - Pens with erasers ... 7
  - Presence detection sensor ... 8
  - Speakers ... 8
  - USB receptacle ... 8
  - Accessory slot ... 9

About SMART software ... 9
Resources for administrators ... 10
- SMART Meeting Pro software installation documentation ... 10
- Training ... 10
- Support center and knowledge base ... 10

Resources for others ... 10
- Resources for decision makers ... 10
- Resources for installers ... 11
- Resources for users ... 11

This chapter introduces SMART Board® 8000i-G5-SMP series interactive flat panels and this guide.

About this guide

This guide explains how to set up and maintain a SMART Board 8000i-G5-SMP series interactive flat panel. It includes the following information:

- How to mount the interactive flat panel
- How to connect power and devices
- How to set up the interactive flat panel

- How to maintain the interactive flat panel for years of use
- How to troubleshoot issues with the interactive flat panel

In addition, this guide includes information on the interactive flat panel's remote management support and on-screen display menu.

This guide is intended for individuals who install and maintain interactive flat panels in their organizations. Other documentation and resources are available for individuals who use interactive flat panels.

About the interactive flat panel

The SMART Board 8000i-G5-SMP series interactive flat panel features SMART's proprietary DViT® (Digital Vision Touch) technology on an LCD screen with e-LED backlight.

Models

Four models of SMART Board 8000i-G5-SMP series interactive flat panel are available:

- SMART Board 8055i-G5-SMP interactive flat panel (SBID8055i-G5-SMP)
- SMART Board 8065i-G5-SMP interactive flat panel (SBID8065i-G5-SMP)
- SMART Board 8065i-G5-SMP-V2 interactive flat panel (SBID8065i-G5-SMP-V2)
- SMART Board 8075i-G5-SMP interactive flat panel (SBID8075i-G5-SMP)

Differences among these models are noted in this guide.

Specifications

Refer to the interactive flat panel's specifications for detailed technical information, including product dimensions and weights.

Features

The interactive flat panel includes the following features:

Feature	Description
Touch support	You can do everything on the interactive flat panel that you can do at your computer—open and close applications, meet with others, create new documents or edit existing ones, visit websites, play and manipulate videos, and so on—by touching the interactive flat panel's surface. You can use an array of gestures within applications, including panning, scaling, rotating and zooming in and out. The interactive flat panel's support for at least four simultaneous touches enables you and other users to interact with objects on the screen at the same time.
Writing and drawing support	You can write over any application in digital ink using one of the supplied pens, and then erase the digital ink using your palm or the eraser on the pen. You and another writer can write or draw digital ink on the screen at the same time. The Pen ID™ feature enables you to assign different ink appearances to each pen.
Audio support	The interactive flat panel includes integrated speakers for presenting audio from connected input sources.
SMART kapp iQ	The interactive flat panel is available with SMART kapp iQ™ functionality. You can share whiteboard sessions with others using your mobile device. Others can contribute to the whiteboard session from their computers or mobile devices.

Components

The interactive flat panel consists of the following components:

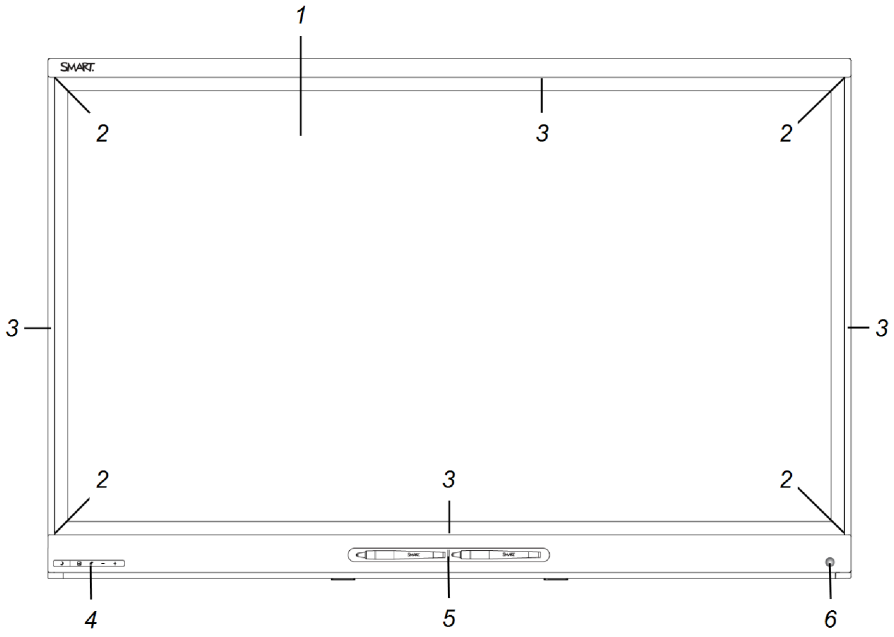

No.	Name	More information
Pictured		
1	Screen	Page 5
2	Cameras	Page 5
3	Reflective tape channel	Page 5
4	Front control panel	Page 6
5	Pen with eraser (×2)	Page 7
6	Presence detection sensor	Page 8
Not pictured		
7	Speakers	Page 8
8	Connector panel	Page 17
10	USB receptacle	Page 8
11	Accessory slot	Page 9

Screen

The screen sizes vary by model:

Model	Diagonal	Width	Height	Aspect ratio
SBID8055i-G5-SMP	54 1/2" (138.4 cm)	47 5/8" (121 cm)	26 3/4" (68 cm)	16:9
SBID8065i-G5-SMP	64 1/2" (163.9 cm)	56 1/4" (142.8 cm)	31 5/8" (80.4 cm)	16:9
SBID8065i-G5-SMP-V2	64 1/2" (163.9 cm)	56 1/4" (142.8 cm)	31 5/8" (80.4 cm)	16:9
SBID8075i-G5-SMP	75" (190.5 cm)	65" (165.2 cm)	38 5/8" (93 cm)	16:9

For information on cleaning the screen, see *Cleaning the screen* on page 33.

Cameras and reflective tape channel

Cameras in the corners of the screen track finger and pen positions across the display. The screen is bordered by a channel that contains reflective tape.

For information on cleaning the camera windows and reflective tape, see *Cleaning the camera windows and reflective tape* on page 33.

CAUTION

- Keep the reflective tape dry.
- Do not remove or damage the reflective tape.

IMPORTANT

- Do not attach adhesive notes or other items to the screen because they will interfere with the cameras.
- Do not place anything in the reflective tape channel because it will interfere with the cameras.

Front control panel

The front control panel contains the Standby, Input Select, Mute and volume control buttons.

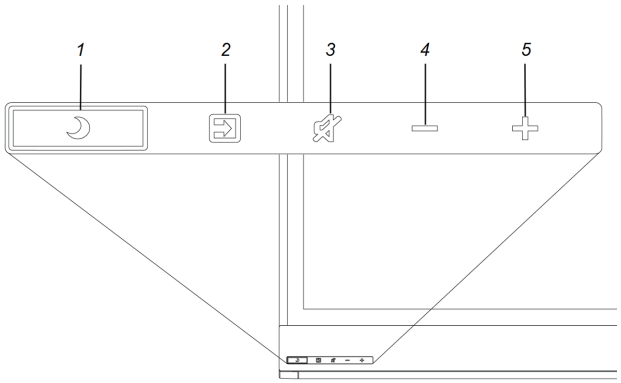

No.	Name
1	Standby button[1]
2	Input Select button[2]
3	Mute button[3]
4	Volume decrease
5	Volume increase

IMPORTANT

If there is a film over the front control panel, remove it before using the front control panel.

In normal operation, all buttons are white.

The Standby button also functions as an indicator light:

Indicator light	Status	Troubleshooting
Solid white	Normal operation	[N/A]

[1]Press and hold to reset the interactive flat panel

[2]Change the input source to OPS/HDMI for the kapp iQ experience.

[3]Press and hold to freeze and unfreeze the screen (SMART Board 8065i-G5-SMP-V2 and 8075i-G5-SMP interactive flat panels only)

Indicator light	Status	Troubleshooting
Off	Not receiving power	Confirm the interactive flat panel's power cable is connected to the power outlet (see page 19). Flick the power switch to the ON (I) position (see page 23).
Solid amber	DPMS (power management) mode	Press the **Standby** button ☽ to exit DPMS mode. Connect an input source.
Flashing amber	No USB connection from the connected computer	Verify the connections to the room computer (see page 20). Switch to the room computer's input source (see page 24).
Slowly flashing white	SMART Board service not running on the connected computer	Ensure that SMART Product Drivers is installed and that the SMART Board service is running.[4]

Pens with erasers

The interactive flat panel comes with two pens with erasers attached.

The interactive flat panel's bottom frame includes magnetic holders for the pens. Removing a pen from the holders activates it, and you can use it to draw or erase digital ink.

CAUTION

When you return the pen to the magnetic holder, make sure it's centered in its holder to keep it from falling and being damaged.

[4]This only applies when a computer is connected to the interactive flat panel's computer connectors.

Presence detection sensor

The interactive flat panel has a presence detection sensor on its bottom frame that can detect people up to 16' (5 m) away when the interactive flat panel is in Standby mode.

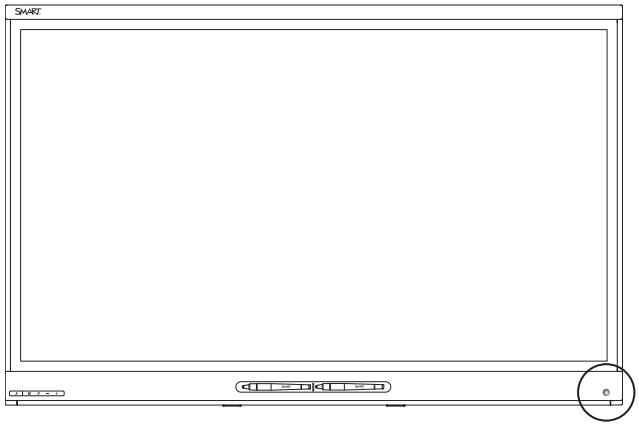

When the sensor detects people in the room, the interactive flat panel turns on. Touching the screen activates the interactive flat panel. If the room is empty for a specified period, the interactive flat panel returns to Standby mode.

NOTES

- See *Cleaning the presence detection sensor* on page 34 for more information.
- If presence detection is enabled, move in range of the presence detection sensor. See Proximity in Setup menu options (support.smarttech.com/docs/hardware/kapp/kapp-iq/en/installing-and-maintaining/using-the-osd-menu/default.cshtml).

  If presence detection is enabled, move in range of the presence detection sensor, see *Appendix A: Using the on-screen display menu* on page 43.

Speakers

The interactive flat panel includes two 10 W integrated side-firing speakers.

You can connect external speakers if desired (see *Connecting external speakers* on page 22).

USB receptacle

You can connect a USB drive or device to the USB Type-A receptacle on the bottom-left corner of the interactive flat panel, and then open and save files to the USB devices.

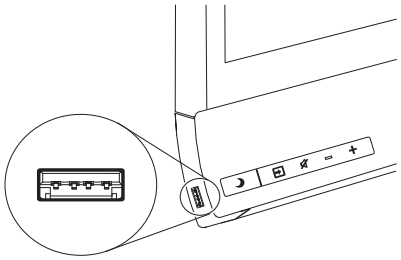

Accessory slot

You can install the AM30 appliance in the accessory slot located on the back of the interactive flat panel to take advantage of SMART kapp iQ functionality.

OR

You can install a mini-computer that meets the requirements defined in the specifications.

NOTES

If you have a SMART Board 8055i-G5-SMP or 8065i-G5-SMP interactive flat panel, you can install the I/O extension module in the accessory slot. When installed, the I/O extension module enables you to connect a computer to the interactive flat panel using USB and HDMI® cables (see *SMART Board 8055i-G5-SMP and 8065i-G5-SMP connector panel* on page 17).

CAUTION

The accessory slot's maximum available power is 60 W. The slot is not a limited power source. To reduce the risk of fire, make sure that accessories connecting to the slot satisfy the fire enclosure requirements of IEC 60950-1.

About SMART software

To take full advantage of the SMART Board 8000i-G5-SMP series interactive flat panel's features, install the following SMART software on computers connected to the interactive flat panel. Go to SMART Downloads (smarttech.com/en/Home+Page/Support/Browse+Support/Download+Software).

Software	Description
SMART Product Drivers	SMART Product Drivers enables connected computers to detect input from the interactive flat panel.
SMART Ink™	SMART Ink enables you to write and draw in digital ink over applications, files, folders, websites and any other open window on your computer. When you write outside the open windows on your computer, a SMART Ink Note appears, and you can write inside the note. When you open an application that has its own ink tools, you can use the application's ink tools to write in the content.

Software	Description
SMART Meeting Pro® software	The room edition of SMART Meeting Pro software is designed for use with the interactive flat panel in a meeting room. The personal edition is designed for use on user computers. You can write or draw on a digital whiteboard, present content by sharing your desktop and connect and use integrated conferencing software to collaborate with local or remote participants.

Resources for administrators

In addition to this guide, SMART provides a variety of other resources for administrators.

SMART Meeting Pro software installation documentation

The interactive flat panel comes with one SMART Meeting Pro software room license to install on the room computer and 25 SMART Meeting Pro software personal licenses to install on users' computers.

To install SMART Meeting Pro software, refer to the *SMART Meeting Pro software system administrator's guide* (smarttech.com/kb/170518).

Training

The SMART training website (smarttech.com/training) includes an extensive library of training resources you can consult as you learn how to set up and maintain the interactive flat panel.

Support center and knowledge base

The Support center (smarttech.com/support) contains a library of documents, including this guide, and a knowledge base that you can search when troubleshooting issues.

Resources for others

SMART provides resources for decision makers, installers and users as well as administrators.

Resources for decision makers

Decision makers can refer to the specifications for detailed information about the interactive flat panels.

Model	Specifications
SBID8055i-G5-SMP	smarttech.com/kb/170815

Model	Specifications
SBID8065i-G5-SMP	smarttech.com/kb/170841
SBID8065i-G5-SMP-V2	smarttech.com/kb/171095
SBID8075i-G5-SMP	smarttech.com/kb/171029

Resources for installers

Installers can refer to the installation instructions included with the interactive flat panel when installing the product. PDF versions of these installation instructions are available for download.

Model	Installation instructions
SBID8055i-G5-SMP SBID8065i-G5-SMP	smarttech.com/kb/170836
SBID8065i-G5-SMP-V2	smarttech.com/kb/171107
SBID8075i-G5-SMP	smarttech.com/kb/170996

Installers should also refer to *Considerations for non-standard installations* (smarttech.com/kb/171035).

Resources for users

Users can refer to the SMART Meeting Pro software Help for information about using the software with the interactive flat panel. To open the Help, users can select **Help** > **Contents** in Whiteboard mode.

Chapter 2

Mounting the interactive flat panel

Before mounting the interactive flat panel 13
Mounting the interactive flat panel vertically 15
Mounting multiple interactive flat panels 15
Choosing a location 15
Choosing a height 16

Mounting the SMART Board 8000i-G5-SMP series interactive flat panel requires a team of professional installers.

The following information is for installers. Installers should read this information along with the installation instructions included with the interactive flat panel before they mount the interactive flat panel.

WARNING

Improper mounting of the interactive flat panel can result in injury and product damage.

Before mounting the interactive flat panel

Remember the following before mounting the interactive flat panel:

- Review the environmental requirements in the interactive flat panel's specifications.
- Save all product packaging so that it's available if you need to transport the interactive flat panel. If the original packaging isn't available, you can purchase new packaging from your authorized SMART reseller (smarttech.com/where).

- Refer to local building codes to ensure the wall can support the weight of the interactive flat panel (specified in the following table) and mounting equipment.

Model	Weight
SBID8055i-G5-SMP	107 lb. (48.4 kg)
SBID8065i-G5-SMP	138 lb. (62.4 kg)
SBID8065i-G5-SMP-V2	134 lb. (60.9 kg)
SBID8075i-G5-SMP	185 lb. (84 kg)

- Use a standard VESA mounting plate (not included) to mount the interactive flat panel on a wall.
- Use M8 screws to fasten the wall bracket.

Screw length 20 mm + *x* mm < M8 < 45 mm + *x* mm
where *x* is the combined thickness of the wall bracket and washer

Fasten force 97.36–177.01 in-lb. (11–20 N·m)

CAUTION

Do not over-tighten the screws.

NOTE

SMART recommends M8 × 30 mm mounting screws for standard installations where the total wall mount bracket and washer thickness is less than 7 mm.

- Because the receptacles might not be easily accessible after the installers mount the interactive flat panel, consider connecting cables for power, computers and other devices while the interactive flat panel is still in its packaging (see *Chapter 3: Connecting power and devices* on page 17).
- Before turning on the interactive flat panel for the first time, clean the camera windows and reflective tape following the instructions in *Cleaning the camera windows and reflective tape* on page 33.

Mounting the interactive flat panel vertically

The interactive flat panel is designed for vertical mounting (90° relative to the floor plus or minus 5° for tolerance). SMART doesn't support mounting the interactive flat panel at other angles.

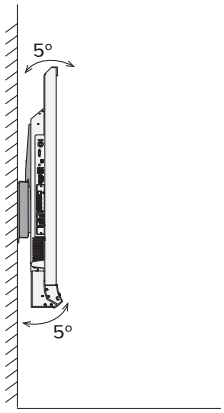

Mounting multiple interactive flat panels

SMART recommends that you mount no more than three interactive flat panels side by side.

If you mount multiple interactive flat panels side by side, install them as shown in the following diagram. This ensures the interactive flat panels' cameras don't interfere with each other.

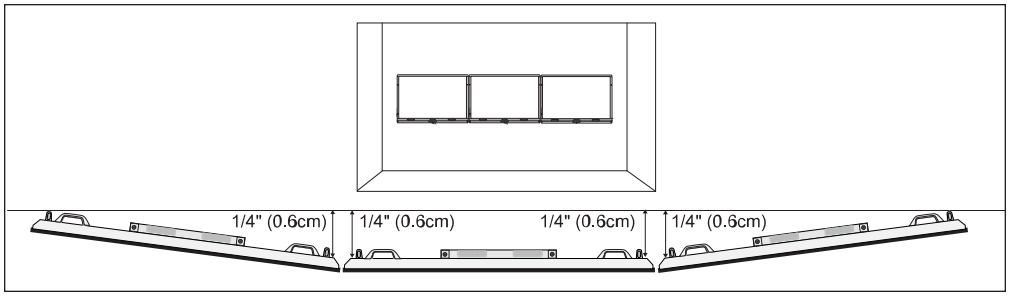

Choosing a location

Consider the following when choosing a location for the interactive flat panel:

- Do not install the interactive flat panel in a location where a door or gate could hit it.
- Do not install the interactive flat panel in an area where it will be subjected to strong vibrations or dust.
- Choose a location that's far from bright light sources, such as windows and strong overhead lighting. Infrared (IR) lighting can cause issues with the performance of the cameras and can lead to unintentional or missed touches.
- Do not install the interactive flat panel near where the mains power supply enters the building.

- Ensure adequate ventilation or provide air conditioning around the interactive flat panel so that heat can flow away from the unit and the mounting equipment.
- If you mount the interactive flat panel in a recessed area, leave at least 4" (10 cm) of space between the interactive flat panel and the recessed walls to enable ventilation and cooling.

Choosing a height

Consider the general height of the user community when you choose the height for the interactive flat panel.

SMART recommends mounting the interactive flat panel so that its top is 6' 5" (1.9 m) from the floor.

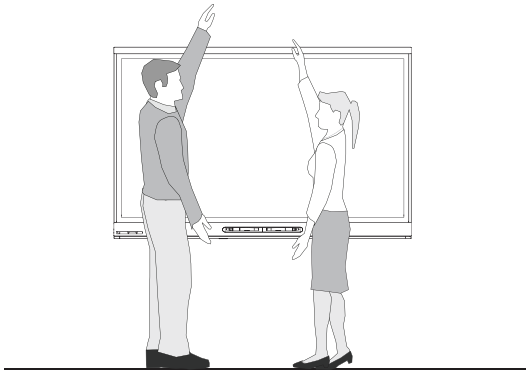

Chapter 3

Connecting power and devices

SMART Board 8055i-G5-SMP and 8065i-G5-SMP connector panel 17
SMART Board 8065i-G5-SMP-V2 and 8075i-G5-SMP connector panel 18
Connecting power 19
Connecting the room computer 20
Connecting cables for a guest laptop 21
Connecting external speakers 22

After mounting the SMART Board 8000i-G5-SMP series but before setting it up, you need to connect it to power and devices.

SMART Board 8055i-G5-SMP and 8065i-G5-SMP connector panel

The following diagram and table present the connectors on SMART Board 8055i-G5-SMP and 8065i-G5-SMP interactive flat panels and the I/O extension module (if installed):

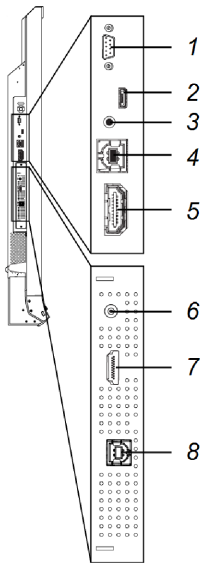

No.	Connector	Connects to	Notes
Interactive flat panel			
1	RS-232	Room control system	See page 53.
2	USB Micro-A	[N/A]	This connector is a service port.
3	Stereo 3.5 mm	External speakers	See page 22.
4	USB Type-B	Room computer or guest laptop (touch)	See page 20.
5	HDMI®	Room computer or guest laptop (video)	The HDMI cable should be HDMI 1.4 compliant and no longer than 16' 5" (5 m). See page 20 for more information.
I/O extension module			
6	Stereo 3.5 mm	[N/A]	This connector is not available for SMART interactive products.
7	HDMI	Room computer (video)	See page 20.
8	USB Type-B	Room computer (touch)	See page 20.

SMART Board 8065i-G5-SMP-V2 and 8075i-G5-SMP connector panel

The following diagram and table present the connectors on SMART Board 8065i-G5-SMP-V2 and 8075i-G5-SMP interactive flat panels:

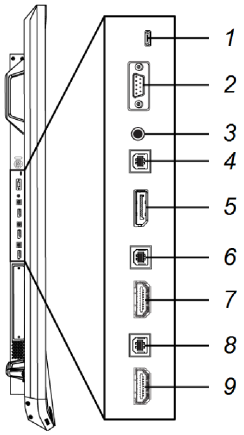

No.	Connector	Connects to	Notes
1	USB Micro-A	[N/A]	This connector is a service port.
2	RS-232	Room control system	See page 53.
3	Stereo 3.5 mm	External speakers	See page 22.
4	USB Type-B	Guest laptop (touch)	See page 21 for more information.
5	DisplayPort	Guest laptop (video)	See page 21 for more information.
6	USB Type-B	Guest laptop (touch)	See page 21 for more information.
7	HDMI	Guest laptop (video)	The HDMI cable should be HDMI 1.4 compliant and no longer than 16' 5" (5 m). See page 21 for more information.
8	USB Type-B	Room computer (touch)	See page 20.
9	HDMI	Room computer (video)	The HDMI cable should be HDMI 1.4 compliant and no longer than 16' 5" (5 m). See page 20 for more information.

Connecting power

Connect the supplied power cable from the AC power inlet on the bottom of the interactive flat panel to a power outlet.

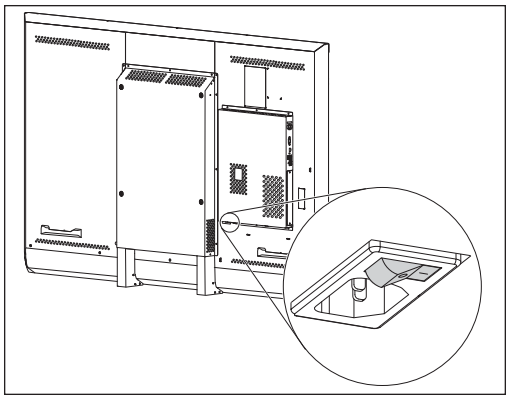

NOTE

Refer to the interactive flat panel's specifications for power requirements and power consumption information (see *Resources for decision makers* on page 10).

Connecting the room computer

How you connect the room computer to the interactive flat panel depends on the model of interactive flat panel and what is installed in the accessory slot:

Models	In the accessory slot	Connections
SBID8055i-G5-SMP SBID8065i-G5-SMP	Nothing	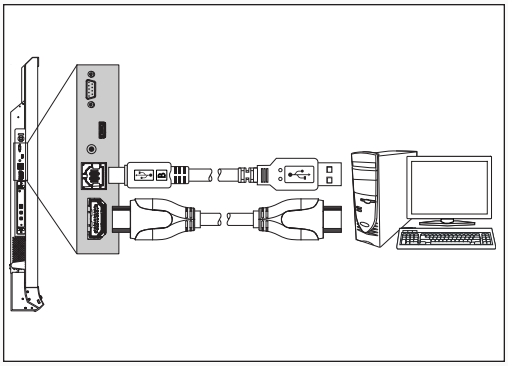
SBID8055i-G5 SBID8065i-G5	I/O extension module	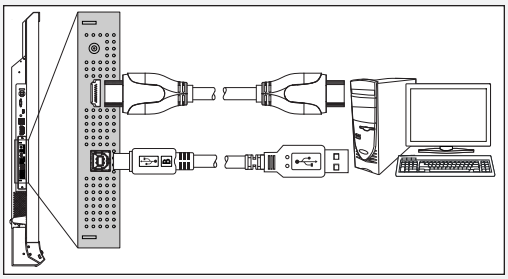
SBID8065i-G5-SMP-V2 SBID8075i-SMP-G5	[N/A]	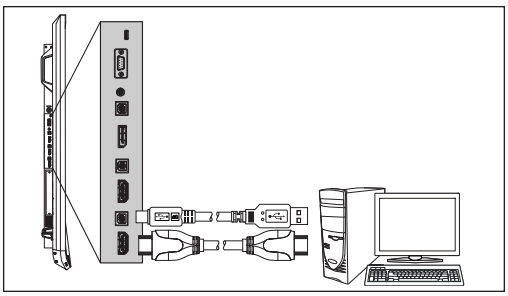

Connecting cables for a guest laptop

Depending on the model and whether the room computer is connected to the interactive flat panel or the I/O extension module, there may be one or two additional sets of connectors available for guest laptops.

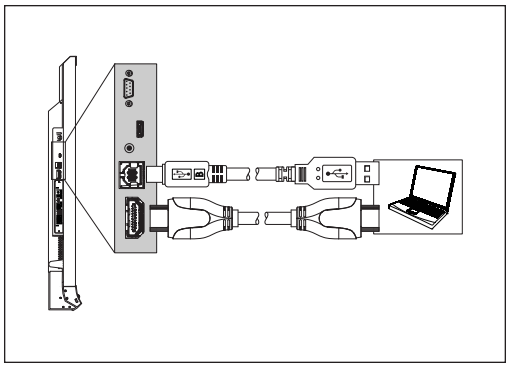

SBID8055i-G5-SMP
SBID8065i-G5-SMP

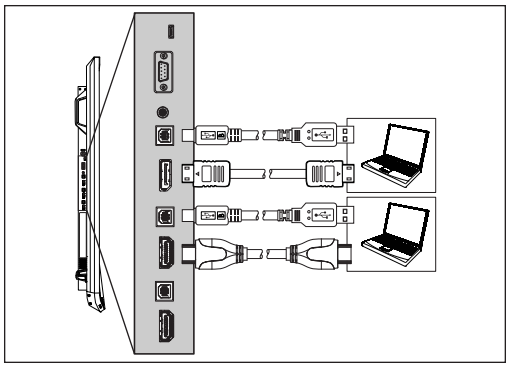

SBID8065i-G5-SMP-V2
SBID8075i-G5-SMP

You can install cables that enable users to connect a guest laptop to the interactive flat panel from another location in the room, such as on a conference table. By installing these cables, you make use of connectors that might not be accessible when the interactive flat panel is wall-mounted.

Connect USB and HDMI or DisplayPort cables to the appropriate connectors on the interactive flat panel. You can then run the cables across floors or behind walls to the conference table.

WARNING

Ensure that any cables that cross the floor to the interactive flat panel are properly bundled and marked to avoid a trip hazard.

Connecting external speakers

The interactive flat panel includes two 10 W speakers. However, you can connect external active speakers using the stereo 3.5 mm connector.

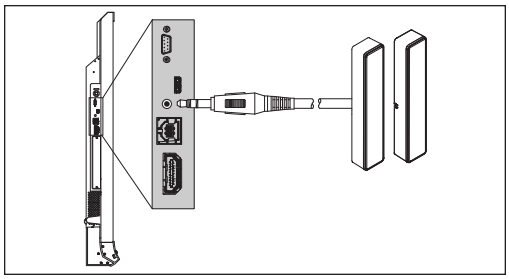

SBID8055i-G5-SMP
SBID8065i-G5-SMP

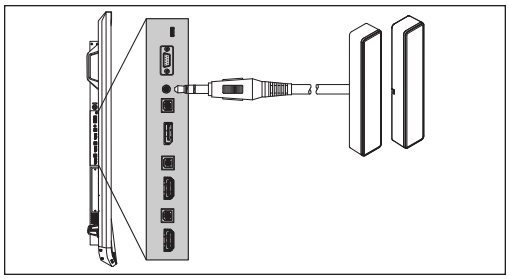

SBID8065i-G5-SMP-V2
SBID8075i-G5-SMP

Chapter 4

Setting up the interactive flat panel and room computer

Turning on the interactive flat panel and room computer for the first time 23
Installing SMART Meeting Pro software 24
Running the SMART Connection Wizard 24
Switching between input sources 24
Displaying multiple input sources 25

After mounting the SMART Board 8000i-G5-SMP series interactive flat panel (see *Chapter 2: Mounting the interactive flat panel* on page 13) and connecting it and the room computer (see *Chapter 3: Connecting power and devices* on page 17), you can turn on and set up both devices.

Turning on the interactive flat panel and room computer for the first time

Turn on the interactive flat panel and room computer after mounting the interactive flat panel and connecting it to the room computer.

To turn on the interactive flat panel and room computer for the first time

1. Turn on the room computer.
2. Turn on the interactive flat panel by flicking the power switch beside the AC power inlet to the ON (I) position.

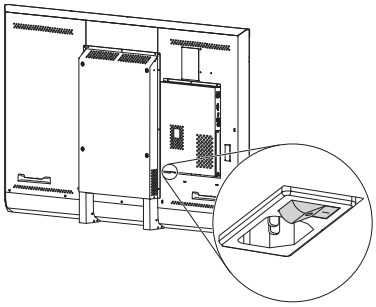

Installing SMART Meeting Pro software

Download and install SMART Meeting Pro software on any connected computers to take full advantage of the interactive flat panel's features.

For more information, refer to the system administrator's guide for your computer's operating system (see *SMART Meeting Pro software installation documentation* on page 10).

Running the SMART Connection Wizard

After installing SMART Meeting Pro software, run the SMART Connection Wizard to calibrate and orient the interactive flat panel.

IMPORTANT

You must calibrate the interactive flat panel before using it.

To run the SMART Connection Wizard

1. Connect a keyboard and mouse to the room computer.
2. Access the SMART Connection Wizard by opening SMART Settings (see *Opening SMART Settings* on page 30).
3. Click **Connection Wizard**.

   The *SMART Connection Wizard* appears.
4. Select the interactive flat panel from the list of connected SMART interactive products, and then click **Next**.
5. Select **Product is being set up for the first time**, and then click **Next**.
6. Follow the on-screen instructions to calibrate and orient the interactive flat panel for the first time.

Switching between input sources

You can switch between input sources at any time by pressing the **Input Select** button on the front control panel:

Option	Input source
HDMI1	Room computer if the room computer is connected to the interactive flat panel OR Guest laptop if a guest laptop is connected to the interactive flat panel
HDMI2	Guest laptop (SMART Board 8065i-G5-SMP-V2 and 8075i-G5-SMP interactive flat panels only)
DisplayPort	Guest laptop (SMART Board 8065i-G5-SMP-V2 and 8075i-G5-SMP interactive flat panels only)
OPS/HDMI	Room computer if the I/O extension module is installed in the accessory slot and the room computer is connected to the I/O extension module
OPS/DisplayPort	Optional mini-computer if installed in the accessory slot (SMART Board 8065i-G5-SMP-V2 and 8075i-G5-SMP interactive flat panels only)

Displaying multiple input sources

You can display up to four input sources on a SMART Board 8065i-G5-V2 or 8075i-G5 interactive flat panel using the on-screen display menu (see *Multi-Window menu options* on page 50).

If you use this feature, be aware that SMART doesn't support touch while multiple input sources are displayed on the interactive flat panel.

Chapter 5

Maintaining the interactive flat panel

Resetting the interactive flat panel 27
Updating firmware and software 28
Updating firmware 28
Updating SMART Meeting Pro software 29
Using SMART Settings 29
Opening SMART Settings 30
Orienting the interactive flat panel 30
Calibrating the interactive flat panel 31
Cleaning and maintaining the interactive flat panel 32
Checking the interactive flat panel installation 32
Cleaning the screen 33
Cleaning the camera windows and reflective tape 33
Cleaning the presence detection sensor 34
Maintaining ventilation 34
Preventing condensation 35
Maintaining pens 35
Removing and transporting the interactive flat panel 35
Removing the interactive flat panel 35
Transporting the interactive flat panel 36

This chapter describes common maintenance procedures for the interactive flat panel.

Resetting the interactive flat panel

You can reset the SMART Board 8000i-G5-SMP series interactive flat panel using the front control panel.

To reset the interactive flat panel

1. Press the **Standby** button on the front control panel.

   A message appears on the screen, prompting you to either press the button again to enter Standby mode or press and hold the button to reset the interactive flat panel.

2. Press and hold the **Standby** button until the screen turns black.

   The interactive flat panel resets, and then your computer's logon screen or desktop appears on the interactive flat panel.

Updating firmware and software

SMART periodically releases updates to the SMART Board 8000i-G5-SMP series interactive flat panel's firmware as well as to SMART software. Install these updates for the best experience.

Updating firmware

The interactive flat panel uses firmware on its processor. Updates to SMART software could include a firmware update in the form of a downloaded firmware executable file. When the interactive flat panel detects this executable file, you're prompted to run the file to update the firmware.

CAUTION

- Only a system administrator should update interactive flat panel firmware.
- Only one interactive flat panel can be connected to the computer during the firmware update.
- Do not disconnect the interactive flat panel from your computer during the firmware update.
- Do not touch the interactive flat panel screen or input button during the firmware update.
- Do not turn off your computer or the interactive flat panel during the firmware update.

To update firmware

1. Make sure the interactive flat panel is connected to a computer on which you've downloaded the firmware update.

2. Browse to and start the firmware updater at the following location:

Operating system	Location
Windows (32-bit)	**C:\Program Files\SMART Technologies\SMART Product Drivers\SMARTFirmwareUpdater.exe**
Windows (64-bit)	**C:\Program Files (x86)\SMART Technologies\SMART Product Drivers\SMARTFirmwareUpdater.exe**

3. Follow the on-screen instructions using the computer's mouse and keyboard. Don't touch the interactive flat panel screen.
4. Select the check box for the SMART product you want to update, and then click **Next**.

   A progress bar appears.
5. When the installation is complete, calibrate the interactive flat panel (see *Calibrating the interactive flat panel* on page 31).

Updating SMART Meeting Pro software

SMART Product Update (SPU) is included in SMART Meeting Pro software. SPU periodically checks for updates to SMART Meeting Pro software and other SMART software posted on the SMART website. You can configure SPU to prompt users to install updates or to install updates automatically.

For more information, refer to the *SMART Meeting Pro software system administrator's guide* (see *SMART Meeting Pro software installation documentation* on page 10).

NOTES

- If you didn't install SPU, you can download updates to SMART Meeting Pro software and other SMART software from smarttech.com/downloads.
- Even if you installed SPU, you should visit smarttech.com from time to time to learn about major new releases of SMART Meeting Pro software and other SMART software.

Using SMART Settings

Use SMART Settings to configure the SMART software on computers connected to the SMART Board 8000i-G5-SMP series interactive flat panel.

Opening SMART Settings

To open SMART Settings on Windows 7 operating system

Select **Start** > **All Programs** > **SMART Technologies** > **SMART Tools** > **SMART Settings**.

SMART Settings appears.

To open SMART Settings on Windows 8 operating system

1. Open the *Apps* screen.
2. Select **SMART Technologies** > **SMART Settings**.

   SMART Settings appears.

To open SMART Settings on Windows 10 operating system

1. Select **Start** > **All apps**.
2. Select **SMART Technologies** > **SMART Settings**.

   SMART Settings appears.

Orienting the interactive flat panel

If the interactive flat panel is connected to a computer and the pointer appears a distance from the actual contact when you touch the screen, orient the interactive flat panel.

NOTE

You can use your finger or a pen to orient the interactive flat panel.

To orient the interactive flat panel when connected to a computer

1. Open SMART Settings (see *Opening SMART Settings* above).
2. Press **Orient**.
3. Press the red targets as they appear. Hold your finger or the tip of the pen at the center of each target, and then lift the pen or finger. When you lift the pen or finger, the target moves to the next orientation point.

   IMPORTANT

   Hold the pen at a right angle to the screen.

4. Continue until you've pressed all the targets.

   The orientation window closes.

5. If orientation doesn't correct inaccurate touch, calibrate the interactive flat panel (see *Calibrating the interactive flat panel* below).

Calibrating the interactive flat panel

Digital cameras in the corners of the interactive flat panel track the position of the pens, eraser and your finger on the interactive surface, and then send the information to the SMART software on connected computers, which interprets this information as mouse clicks, digital ink or an eraser in the appropriate location. Calibration determines the position and angles of the cameras to accurately identify the location of touches on the interactive flat panel.

IMPORTANT

If an error message appears while you calibrate the interactive flat panel, contact SMART Support (smarttech.com/contactsupport).

To calibrate the interactive flat panel when connected to a computer

1. Open SMART Settings (see *Opening SMART Settings* on the previous page).
2. Press **SMART Hardware Settings**.
3. If more than one SMART product is connected to your computer, select the interactive flat panel.
4. Select **Advanced Settings** from the drop-down list.
5. Press **Calibrate**, and then follow the on-screen instructions.

   The calibration screen appears. This can take a few moments.

6. Press the red target with the tip of a pen. Hold the tip at the center of the target until the target turns green, and then lift the pen.

   The target moves to the next location.

   NOTE

   You can calibrate a target again by pressing the LEFT ARROW key on your keyboard.

7. Continue pressing targets until the second calibration screen and a grid appears.

   An example appears briefly to demonstrate how to draw across the screen to calibrate the interactive surface.

8. Use a pen to draw a spiral horizontally across the grid. As you draw, the ink is blue. As you complete each square, the square becomes green.

9. When all the squares are green, a progress bar appears.

   When the progress bar is full, the interactive flat panel displays the message *Calibration successful*.

   IMPORTANT

   Wait until the calibration screen indicates that the interactive flat panel is operating correctly before proceeding.

10. Orient the interactive flat panel (see *Orienting the interactive flat panel* on page 30).

Cleaning and maintaining the interactive flat panel

With proper cleaning and maintenance, the SMART Board 8000i-G5-SMP series interactive flat panel will provide years of use.

Checking the interactive flat panel installation

Inspect the interactive flat panel installation frequently to ensure that it remains securely installed.

- Check the mounting location for signs of damage or weakness that can occur over time.
- Check for loose screws, gaps, distortions or other issues that could occur with the mounting hardware.

If you find an issue, contact a professional installer.

Cleaning the screen

Follow these instructions to clean the interactive flat panel screen without damaging its anti-glare coating or other product components.

CAUTION

- Do not use permanent or dry-erase markers on the screen. If dry-erase markers are used on the screen, remove the ink as soon as possible with a lint-free, non-abrasive cloth.
- Do not rub the screen with a dense or rough material.
- Do not apply pressure to the screen.
- Do not use cleaning solution or glass cleaner on the interactive flat panel screen, because they can deteriorate or discolor the screen.
- Avoid touching the reflective tape between the screen and the frame, and ensure that this strip stays dry. Damage to this strip affects touch interactivity.

To clean the screen

1. Turn off any connected computers.
2. Press the **Standby** button on the front control panel twice.
3. Turn the interactive flat panel off by flicking the power switch beside the AC power inlet.
4. Wipe the screen with a lint-free, non-abrasive cloth.

Cleaning the camera windows and reflective tape

The interactive flat panel's DViT technology uses four cameras in the corners of the frame and the reflective material between the screen and the frame. Dust buildup on the camera windows or reflective tape can impair touch performance.

Inspect these areas regularly for dust, and clean them if any obvious buildup has occurred.

CAUTION

- Dust buildup on the camera windows and reflective tape will degrade touch performance. SMART recommends that you inspect the camera windows and reflective tape for buildup and clean weekly.
- Do not use compressed air to clean the camera windows or borders.
- Do not use water, chemicals or cleaning agents.

- Applying too much pressure when cleaning the tape or cameras can damage the tape and cause performance issues or errors.

To clean the camera windows and reflective tape

1. Using a clean lint-free cloth, gently wipe the camera windows in the top corners and the reflective tape along the top of the interactive flat panel screen.
2. Gently wipe the reflective tape along the sides of the interactive flat panel screen.
3. Gently wipe the camera windows in the bottom corners and the reflective strip across the bottom of the interactive flat panel screen.

Cleaning the presence detection sensor

The interactive flat panel has a presence detection sensor on its bottom frame.

Inspect the sensor regularly for dust and gently wipe it using a clean lint-free cloth if buildup has occurred.

CAUTION

Do not use compressed air, water, chemical agents or cleaning agents to clean the sensor.

Maintaining ventilation

The interactive flat panel requires proper ventilation. Dust buildup in the ventilation holes compromises cooling and can lead to product failure.

- Clean accessible ventilation holes monthly with a dry cloth.
- Use a vacuum cleaner with a narrow hose end fitting to clear the back ventilation holes regularly. You might have to remove the interactive flat panel from the wall. For more information on removing the interactive flat panel, see *Removing and transporting the interactive flat panel* on the facing page.

CAUTION

Avoid setting up or using the interactive flat panel in an area with excessive levels of dust, humidity or smoke.

Preventing condensation

The interactive flat panel screen contains layers of glass that can collect condensation, especially in the following conditions:

- Temperature extremes with high humidity
- Rapid changes in humidity, which can occur when you operate the product near water (such as a pool, kettle or air conditioner ventilator)
- Direct exposure to sunlight

To evaporate condensation from the interactive flat panel

1. Remove the humidity source from the interactive flat panel, if possible.
2. Turn off the interactive flat panel.
3. Remove any moisture from the interactive flat panel with a smooth, dry cloth.
4. Leave the interactive flat panel turned off for 48 hours.

Maintaining pens

To prevent damage to the interactive flat panel's anti-glare coating, replace a pen if its nib becomes worn. You can purchase replacement pens from the Store for SMART Parts (see smarttech.com/Support/PartsStore).

Removing and transporting the interactive flat panel

On occasion, you might need to remove the SMART Board 8000i-G5-SMP series interactive flat panel from its current location and transport it to another location.

Removing the interactive flat panel

To remove the interactive flat panel safely, use two or more professional installers.

WARNING

- Do not attempt to move the interactive flat panel by yourself. The interactive flat panel is very heavy.
- Do not move the interactive flat panel by connecting a rope or wire to the handles on the back. The interactive flat panel can fall and cause injury and product damage.

IMPORTANT

Follow the instructions included with the floor stand or mounting hardware.

To remove the interactive flat panel

1. Turn off any connected computers.
2. Press the **Standby** button on the interactive flat panel's front control panel twice.
3. Turn off the interactive flat panel by flicking the power switch beside the AC power inlet.
4. Remove all accessible cables and connectors.
5. Remove any modules from the accessory slot.
6. Lift the interactive flat panel from its mounting location.

   WARNING

   Do not place the interactive flat panel on a sloping or unstable cart, stand or table, because the interactive flat panel could fall, resulting in injury and severe product damage.

   CAUTION

   Do not leave the interactive flat panel face up, face down or upside down for an extended period, because it could cause permanent damage to the screen.

7. Remove the mounting brackets.

Transporting the interactive flat panel

Save your original packaging so that you can repack the interactive flat panel with as much of the original packaging as possible. This packaging was designed to provide the best possible protection against shock and vibration. If the original packaging isn't available, you can purchase the same packaging directly from your authorized SMART reseller (smarttech.com/where).

CAUTION

Transport the interactive flat panel only in original or replaced packaging. Transporting the interactive flat panel without correct packaging can lead to product damage and voids the warranty.

Chapter 6

Troubleshooting

Resolving issues with the interactive flat panel 37
Using the indicator light to resolve common issues 37
Resolving presence detection issues 37
Resolving image issues 38
Resolving touch issues 39
Resolving connected computer issues 39
Locating the interactive flat panel serial number 41
Using SMART software to resolve issues 41
Using the SMART Connection Wizard 41
Using SMART Diagnostics 42

This chapter helps you solve issues that can occur with the interactive flat panel.

Resolving issues with the interactive flat panel

To resolve issues with the SMART Board 8000i-G5-SMP series interactive flat panel, review the following information. If the issues persist or aren't covered in the following information, contact SMART Support (smarttech.com/contactsupport).

Using the indicator light to resolve common issues

The Standby button on the front control panel also functions as an indicator light. You can use the indicator light to resolve common issues with the interactive flat panel. For more information, see *Front control panel* on page 6.

Resolving presence detection issues

Use the following table to resolve presence detection issues:

Symptom	Cause	Solution
The interactive flat panel isn't turning on.	Presence detection isn't enabled.	Enable presence detection. See Proximity in Setup menu options (support.smarttech.com/docs/hardware/kapp/kapp-iq/en/installing-and-maintaining/using-the-osd-menu/default.cshtml).

Symptom	Cause	Solution
	There isn't enough difference between the room temperature and human body temperature.	Reduce the room temperature.
	You aren't within 16' (5 m) of the interactive flat panel.	Move closer to the interactive flat panel or make bigger motions.
	There is glass, acrylic or similar material between you and the interactive flat panel.	Remove the material.
	Sunlight is hitting the interactive flat panel.	Close any blinds or shades.
	There is glass, acrylic or similar material between you and the interactive flat panel.	Remove the material.
The interactive flat panel is turning on when people aren't present.	There's a sudden temperature change in the room (for example, humidifier emission, air conditioning or heating system).	Remove the source of major temperature fluctuation.
	Sunlight is hitting the interactive flat panel.	Close any blinds or shades.

Resolving image issues

Use the following table to resolve image issues:

Symptom	Cause	Solution
There is a persistent image on the screen.	You or another user pressed and held the **Mute** button on the front control panel of the SMART Board 8065i-G5-SMP-V2 or 8075i-G5-SMP interactive flat panel, causing the screen to freeze.	Unfreeze the screen by doing one of the following: • Press and hold the **Mute** button. • Change input sources. • Disconnect the currently selected input source. • Exit Standby mode.
	An image was displayed for too long.	Turn off the interactive flat panel and leave it turned off for as long as the image was on the screen. Set up screen savers on any connected computers to prevent persistent images.

Resolving touch issues

Use the following table to resolve touch issues:

Symptom	Cause	Solution
When you touch the screen, the pointer appears in the wrong place.	You aren't touching the screen at a right angle.	See *Touching and drawing on your SMART Board interactive whiteboard is inaccurate* (kb.smarttech.com/?q=13976).
	The interactive flat panel isn't oriented.	Orient the interactive flat panel (see page 30).
An area of the screen doesn't respond to touch, or when you draw digital ink, the lines are broken.	Something is blocking the cameras.	Ensure nothing is taped to the screen.
	Something is in the reflective tape channel.	Remove items from the reflective tape channel.
	Your finger or pen is skipping as you draw. This is most common on the upstroke.	Use consistent pressure while drawing digital ink.
	Bright lights are interfering with the cameras.	Close blinds or shades or dim all halogen lights and LEDs.
	The cameras require calibration, possibly because of a temperature change in the room.	Calibrate the interactive flat panel (see page 31).
	If you're sharing content from your computer or mobile device to the board using Wireless Screen Share, you're unable to ineract with the screen using your fingers or pens.	
You can interact with screen elements by touching them, but you can't write or draw using the pens.	The cameras require calibration, possibly because of a temperature change in the room.	Calibrate the interactive flat panel (see page 31).

Resolving connected computer issues

Use the following table to resolve connected computer issues:

Symptom	Cause	Solution
The connected computer's display is too large, too small or doesn't completely fill the screen.	The connected computer's video resolution settings don't match the interactive flat panel's native resolution.	Set the computer's video resolution to 3840 × 2160 at 30 Hz. (If the connected computer can't support this resolution, consider 1920 × 1080 at 60 Hz as an alternative.)

Symptom	Cause	Solution
The connected computer's screen resolution is correct, but the image is surrounded by black bars.	The connected computer's video card is underscanning the image.	Turn off or adjust the overscan/underscan feature in the video card driver software until the image fits the screen resolution. Refer to the computer's video card Help for more information. Select the 4K UHD option from the video card driver's advanced menu (if available).
	The video cable is of poor quality.	Replace the video cable with a better quality video cable.
	You're using two connected video cables.	Replace the two cables with one longer cable. OR Move the computer so that it's within a single cable length of the interactive flat panel.
The connected computer's display is unstable or unfocused.	The video connection is loose.	Secure the video cable to both your computer and the interactive flat panel.
	The video cable is of poor quality.	Replace the video cable with a better quality video cable.
	You're using two connected video cables.	Replace the two cables with one longer cable. OR Move the computer so that it's within a single cable length of the interactive flat panel.
	The connected computer's video display card is defective.	Connect a different computer to the interactive flat panel. If this improves the image quality, consider replacing the video card in the original computer.
The SMART Board icon doesn't appear.	SMART Product Drivers isn't installed.	Download and install SMART Product Drivers from smarttech.com/downloads.
	SMART Product Drivers isn't running.	Start SMART Product Drivers following the steps in the Help.
Touch interactivity is slow.	The connected computer is running too many applications.	Close some open applications.
	The connected computer doesn't meet SMART requirements.	Upgrade the computer or replace it with another computer that meets system requirements.
	You haven't used a USB 2.0 cable to connect the interactive flat panel to the computer.	Use a USB 2.0 cable and ensure it's connected to the correct USB receptacle (see page 20).

Symptom	Cause	Solution
There's no sound when you play an audio file.	The connected computer's playback device isn't set correctly.	Ensure the connected computer's playback device is set as the interactive flat panel (see the connected computer's documentation).
	The SMART Board 8055i-G5-SMP or 8065i-G5-SMP interactive flat panel's audio input isn't set correctly.	Ensure the interactive flat panel's audio input is set as the computer's audio connector (see page 46).
	The connected computer is muted.	Turn off the mute setting.
	The connected computer's volume is too low.	Turn up the volume on the computer.
	The interactive flat panel is muted.	Turn off the mute setting using the front control panel.
	The interactive flat panel's volume is too low.	Turn up the volume using the front control panel.

Locating the interactive flat panel serial number

If you ever need to contact SMART Support for help with your SMART kapp iQ board, you'll be asked for board's serial number. The serial number is located in three Aplaces:

- The on-screen display menu (see *Serial Number* on page 47)
- The on-screen display menu. See Serial Number in the About menu options (support.smarttech.com/docs/hardware/kapp/kapp-iq/en/installing-and-maintaining/using-the-osd-menu/default.cshtml).
- Underneath the bottom frame
- On the back of the interactive flat panel

Using SMART software to resolve issues

You can resolve some issues with the SMART Board 8000i-G5-SMP series interactive flat panel using the SMART Connection Wizard and SMART Diagnostics.

Using the SMART Connection Wizard

You can resolve a variety of issues using the SMART Connection Wizard found in SMART Settings.

To use the SMART Connection Wizard

1. Access the SMART Connection Wizard by opening SMART Settings (see *Opening SMART Settings* on page 30).

2. Press **Connection Wizard**.

   The *SMART Connection Wizard* appears.

3. Select the interactive flat panel from the list of connected SMART interactive products, and then press **Next**.

4. Select the option that best describes the issue you're encountering, and follow the on-screen instructions.

Using SMART Diagnostics

If you touch the interactive flat panel's surface and nothing happens, if there is no digital ink, or if the ink appears in some locations and not in others, use SMART Diagnostics to help identify and resolve these issues.

IMPORTANT

Do not change diagnostic settings unless asked to do so by SMART Support.

To check camera views

1. Open SMART Settings (see *Opening SMART Settings* on page 30).

2. Select **About Software and Product Support** > **Tools** > **Diagnostics**.

   SMART Diagnostics opens.

3. Select **View** > **SPNL-6000/SBID8000-G5 Bar**.

   The group box appears.

4. Press **View**.

   The camera view screen appears.

5. Click **Get image** to display the four camera views. This could take a few moments.

   If one of the camera views doesn't appear, the camera is blocked or can't locate the reflective tape on the interactive flat panel's inner frame.

   NOTE

   You can compare the camera view to examples of normal camera views.

6. Check the camera lens and ensure that nothing is blocking its view and that nothing is affixed to the interactive surface.

Appendix A

Using the on-screen display menu

Changing settings in the on-screen display menu 44
SMART Board 8055i-G5-SMP and 8065i-G5-SMP on-screen display menu 44
- Picture menu options 44
- Sound menu options 45
- OSD menu options 46
- Setup menu options 46
- About menu options 47

SMART Board 8065i-G5-SMP-V2 and 8075i-G5-SMP on-screen display menu 48
- Picture menu options 48
- Sound menu options 49
- OSD menu options 49
- Setup menu options 49
- Multi-Window menu options 50
- About menu options 51

You can access the on-screen display menu using the menu control panel located on the side of the SMART Board 8000i-G5-SMP series interactive flat panel.

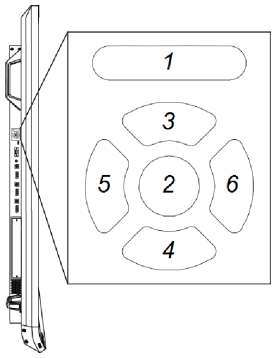

No.	Name
1	MENU
2	SET
3	[Up]

No.	Name
4	[Down]
5	[Left]
6	[Right]

Changing settings in the on-screen display menu

To change settings in the on-screen display menu

1. Press the **MENU** button on the menu control panel.

   The on-screen display menu appears.

2. Press the up and down arrows to highlight a menu, and then press **SET**.
3. Press the up and down arrows to highlight a menu option.
4. Press the left and right arrows to change the menu option's setting.

   OR

   Press the right arrow to open the menu option's submenu. (Repeat steps 3 and 4 to change settings in the submenu.)

5. Press **MENU** until the on-screen menu closes.

SMART Board 8055i-G5-SMP and 8065i-G5-SMP on-screen display menu

Picture menu options

Option	Values	Function	Notes
Picture Mode	Standard User Dynamic	Sets the picture mode	Select **User** to customize brightness, contrast, sharpness and other *Picture* options. Select one of the other values to set brightness, contrast, sharpness and other *Picture* options to default values.

Option	Values	Function	Notes
• Brightness	0–100	Sets the overall brightness of the image and background	You can modify this option only if you select **User** in *Picture Mode*.
• Contrast	0–100	Sets the difference in brightness between the lightest and darkest parts of the image.	You can modify this option only if you select **User** in *Picture Mode*.
• Black Level	0–100	Sets the level of brightness in the darkest parts of the image	You can modify this option only if you select **User** in *Picture Mode*.
• Color	0–100	Sets the image color depth	You can modify this option only if you select **User** in *Picture Mode*.
• Sharpness	0–100	Sets the image sharpness	You can modify this option only if you select **User** in *Picture Mode*.
▸ Color temperature	Normal Warm User Cool	Sets the color temperature	Select **User** to customize the amount of red, green and blue in the image. Select one of the other values to set the amount of red, green and blue in the image to default values.
• Red	0–100	Sets the amount of red in the image	You can modify this option only if you select **User** in *Color Temperature*.
• Green	0–100	Sets the amount of green in the image	You can modify this option only if you select **User** in *Color Temperature*.
• Blue	0–100	Sets the amount of blue in the image	You can modify this option only if you select **User** in *Color Temperature*.
• Movie Mode	Off Low Middle High	Sets the brightness, contrast, black level, color and sharpness for movie watching	[N/A]
• Picture Reset	[N/A]	Resets all options in the *Picture* menu to their default values	[N/A]

Sound menu options

Option	Values	Function	Notes
▸ Sound Mode			
• Treble	L50–R50	Sets the high frequency sound	[N/A]
• Bass	L50–R50	Sets the low frequency sound	[N/A]
▸ EQ			
• 120 Hz	0–100	Sets the sound equalization at 120 Hz	[N/A]

Option	Values	Function	Notes
• 500 Hz	0–100	Sets the sound equalization at 500 Hz	[N/A]
• 1.2 kHz	0–100	Sets the sound equalization at 1.2 kHz	[N/A]
• 7.5 kHz	0–100	Sets the sound equalization at 7.5 kHz	[N/A]
• 12 kHz	0–100	Sets the sound equalization at 12 kHz	[N/A]
• Balance	L50–R50 OR -50–50	Balances the left and right volume	[N/A]
• Audio Input	[Depends on the current video input]	Sets the audio input source	If HDMI is the current video input, the available values are HDMI and USB. If OPS/HDMI is the current video input, the available values are OPS Digital and USB.
• Sound Reset	[N/A]	Resets all options in the *Sound* menu to their default values	[N/A]

OSD menu options

Option	Values	Function	Notes
• Language	[Languages]	Sets the on-screen display menu's language	[N/A]
• OSD Turn Off	Off 5 seconds 10 seconds 15 seconds	Sets the time of inactivity before the on-screen display menu turns off	[N/A]
• OSD Reset	[N/A]	Resets all options in the *OSD* menu to their default values	[N/A]

Setup menu options

Option	Values	Function	Notes
• Power Save	On Off	Enables or disables Power Save mode	When Power Save mode is enabled and there is no video input, the interactive flat panel displays *No Signal* for 25 seconds before turning off.

Option	Values	Function	Notes
• Monitor ID	1–100	Specifies a unique ID for the interactive flat panel	[N/A]
• FBC Control	On Off	Enables or disables the front control panel	[N/A]
▸ Proximity	On Off	Enables or disables presence detection	[N/A]
• Re-enable Time	1Min.–10Min.	Sets how long the interactive flat panel waits before detecting motion again	[N/A]
• Auto Power Off	15Min.–240Min.	Sets how long the interactive flat panel waits before turning off	[N/A]
• Video input detect	On Off	Enables or disables video input detection	With video input detection, the interactive flat panel displays the default video input when there are no computers or other devices connected. Video input detection is useful in scenarios where a user connects a laptop to the interactive flat panel for a meeting and forgets to return to the default video input after disconnecting the laptop.
• Lync® Room Reset	[N/A]	Resets options in all menus to their default values (for a SMART Room System™ with Skype® for Business)	[N/A]
• Setup Reset	[N/A]	Restores the setup settings to their default value	[N/A]
• Factory Reset	[N/A]	Resets options in all menus to their default values	[N/A]

About menu options

Option	Values	Function	Notes
• Model Number	[N/A]	Displays the interactive flat panel's model number	[N/A]
• Serial Number	[N/A]	Displays the interactive flat panel's serial number	[N/A]
• Scalar firmware version	[N/A]	Displays the interactive flat panel's scalar firmware version	[N/A]
• Touch firmware version	[N/A]	Displays the interactive flat panel's touch firmware version	[N/A]
• OPS Information	[N/A]	Displays whether a module is installed in the accessory slot	[N/A]

SMART Board 8065i-G5-SMP-V2 and 8075i-G5-SMP on-screen display menu

Picture menu options

Option	Values	Function	Notes
▸ Picture Mode	Standard User Dynamic	Sets the picture mode	Select **User** to customize brightness, contrast, sharpness and other *Picture* options. Select one of the other values to set brightness, contrast, sharpness and other *Picture* options to default values.
• Brightness	0–100	Sets the overall brightness of the image and background	You can modify this option only if you select **User** in *Picture Mode*.
• Contrast	0–100	Sets the difference in brightness between the lightest and darkest parts of the image.	You can modify this option only if you select **User** in *Picture Mode*.
• Black Level	0–100	Sets the level of brightness in the darkest parts of the image	You can modify this option only if you select **User** in *Picture Mode*.
• Color	0–100	Sets the image color depth	You can modify this option only if you select **User** in *Picture Mode*.
• Sharpness	0–100	Sets the image sharpness	You can modify this option only if you select **User** in *Picture Mode*.
▸ Color temperature	Normal Warm User Cool	Sets the color temperature	Select **User** to customize the amount of red, green and blue in the image. Select one of the other values to set the amount of red, green and blue in the image to default values.
• Red	0–100	Sets the amount of red in the image	You can modify this option only if you select **User** in *Color Temperature*.
• Green	0–100	Sets the amount of green in the image	You can modify this option only if you select **User** in *Color Temperature*.
• Blue	0–100	Sets the amount of blue in the image	You can modify this option only if you select **User** in *Color Temperature*.
• Local Dimming	On Off	Enables or disables local dimming mode.	This option is applicable to only SMART Board 8075i-G5-SMP interactive flat panels.
• Picture Reset	[N/A]	Resets all options in the *Picture* menu to their default values	[N/A]

Sound menu options

Option	Values	Function	Notes
• Volume	0–100	Sets the volume	[N/A]
• Balance	L50–R50 OR -50–50	Balances the left and right volume	[N/A]
• Sound Reset	[N/A]	Resets all options in the *Sound* menu to their default values	[N/A]

OSD menu options

Option	Values	Function	Notes
• Language	[Languages]	Sets the on-screen display menu's language	[N/A]
• OSD Turn Off	Off 5 seconds 10 seconds 15 seconds	Sets the time of inactivity before the on-screen display menu turns off	[N/A]
• OSD Reset	[N/A]	Resets all options in the *OSD* menu to their default values	[N/A]

Setup menu options

Option	Values	Function	Notes
• Power Save	On Off	Enables or disables Power Save mode	When Power Save mode is enabled and there is no video input, the interactive flat panel displays *No Signal* for 25 seconds before turning off.
• Monitor ID	1–100	Specifies a unique ID for the interactive flat panel	[N/A]
• FBC Control	On Off	Enables or disables the front control panel	[N/A]
• Wake to Touch	On Off	Enables or disables the ability to wake the interactive flat panels by touching the screen.	[N/A]
▸ Proximity	On Off	Enables or disables presence detection	[N/A]
• Re-enable Time	1Min.–10Min.	Sets how long the interactive flat panel waits before detecting motion again	[N/A]

Option	Values	Function	Notes
• Auto Power Off	15Min.–240Min.	Sets how long the interactive flat panel waits before turning off	[N/A]
• Video input detect	Off OPS/HDMI OPS/DisplayPort	Specifies the default video input source when video input detection is enabled	With video input detection, the interactive flat panel displays the selected video input when there are no computers or other devices connected. Video input detection is useful in scenarios where a user connects a laptop to the interactive flat panel for a meeting and forgets to return to the default video input after disconnecting the laptop.
• Setup Reset	[N/A]	Restores the setup settings to their default value	[N/A]
• Factory Reset	[N/A]	Resets options in all menus to their default values	[N/A]

Multi-Window menu options

Option	Values	Function	Notes
• Multi-Window Mode	Off Dual Quad	Sets the number of video inputs displayed on the interactive flat panel's screen to one (**Off**), two (**Dual**) or four (**Quad**)	If you use this feature, be aware that SMART doesn't support touch while multiple input sources are displayed on the interactive flat panel.
• Audio Input	Window1 Window2 WIndow3 Window4	Sets the audio input source when multiple video inputs are displayed	You can modify this option only if you select **Dual** or **Quad** in *Multi-Windows Mode*.
• Window1	[Depends on the model]	Select the video input for the first window	You can modify this option only if you select **Dual** or **Quad** in *Multi-Windows Mode*.
• Window2	[Depends on the model]	Select the video input for the second window	You can modify this option only if you select **Dual** or **Quad** in *Multi-Windows Mode*.
• Window3	[Depends on the model]	Select the video input for the third window	You can modify this option only if you select **Quad** in *Multi-Windows Mode*.
• Window4	[Depends on the model]	Select the video input for the fourth window	You can modify this option only if you select **Quad** in *Multi-Windows Mode*.

About menu options

Option	Values	Function	Notes
• Model Number	[N/A]	Displays the interactive flat panel's model number	[N/A]
• Serial Number	[N/A]	Displays the interactive flat panel's serial number	[N/A]
• Scalar firmware version	[N/A]	Displays the interactive flat panel's scalar firmware version	[N/A]
• Touch firmware version	[N/A]	Displays the interactive flat panel's touch firmware version	[N/A]
• OPS Information	[N/A]	Displays whether a module is installed in the accessory slot	[N/A]

Appendix B

Remotely managing the interactive flat panel

Connecting a computer to the interactive flat panel 53
Configuring the computer's serial interface settings 54
Power modes 55
Commands and responses 55
SMART Board 8055i-G5-SMP and 8065i-G5-SMP command inventory 57
- Power state 57
- Source 58
- Video 58
- Audio 60
- System information 61

SMART Board 8065i-G5-SMP-V2 and 8075i-G5-SMP command inventory 63
- Power state 64
- Source 64
- Video 65
- Audio 67
- Multi-Window 67
- System information 69

You can connect a computer to the room control input on the SMART Board 8000i-G5-SMP series interactive flat panel to remotely select video inputs, turn the interactive flat panel on or off and get information about the interactive flat panel's current settings, such as contrast and power state.

Connecting a computer to the interactive flat panel

To connect a computer to the interactive flat panel

Connect an RS-232 cable from the computer's serial output to the room control input on the connector panel.

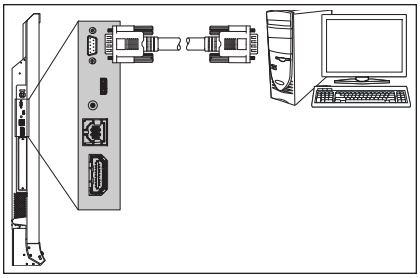

SBID8055i-G5-SMP
SBID8065i-G5-SMP

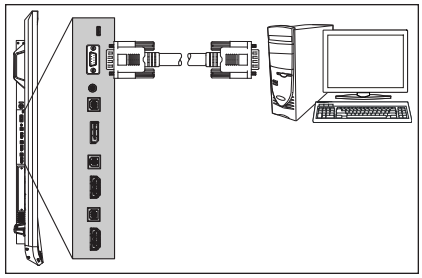

SBID8065i-G5-SMP-V2
SBID8075i-SMP-G5

IMPORTANT

Do not use a null modem cable. Use only a standard RS-232 cable.

Configuring the computer's serial interface settings

Configure the computer's serial interface before sending commands to the interactive flat panel.

To configure the computer's serial interface

1. Turn on the interactive flat panel.
2. Turn on the computer, and then start the serial communications program or terminal emulation program.
3. Activate local echo.
4. Configure the serial interface settings using the following values, and then press ENTER.

Baud rate	19200
Data length	8
Parity bit	None
Stop bit	1

A command prompt (>) appears on the following line, and the interactive flat panel can now accept commands from the computer.

NOTE

If no message appears or an error message appears, the serial interface isn't configured correctly. Repeat steps 3 and 4.

Power modes

The interactive flat panel has three power modes:

- On
- Power Save
- Standby

All commands are available when the interactive flat panel is on. Some commands are available when the interactive flat panel is in Standby mode.

Commands and responses

To access interactive flat panel information or to adjust interactive flat panel settings using the room control system, type commands after the command prompt (>), and then wait for the response from the interactive flat panel.

CORRECT

```
>get contrast
contrast=55
```

If you type a command that the room control system doesn't recognize, you receive an invalid command response.

In the example below, the user included an extra space in the contrast command.

INCORRECT

```
>set con trast=65
invalid cmd=set con trast=65
```

NOTES

- Use ASCII formatted commands.
- Commands aren't case-sensitive.
- Review each entry carefully before you press ENTER.
- Don't send another command until you receive the response and the next command prompt.

To view a list of available commands

Type **?** at the command prompt, and then press ENTER.

To identify the current value of a setting

Use the **get** command.

This example shows how to get the contrast level:

```
>get contrast
contrast=55
```

To identify the current value of a setting for a specific video input

Use the **get** command and specify the video input.

This example shows how to get the contrast level for the HDMI video input:

```
>get contrast hdmi1
contrast hdmi1=65
```

NOTE

You must connect the video input to the interactive flat panel to identify a value for it, but the video input doesn't need to be in use.

To assign a value to a setting

Use the **set** command.

This example sets the contrast level to 65:

```
>set contrast=65
contrast=65
```

To assign a value to a setting for a specific video input

Use the **set** command and specify the video input.

This example sets the contrast level to 70 for the HDMI video input:

```
>set contrast hdmi1=70
contrast hdmi1=70
```

NOTE

You must connect the video input to the interactive flat panel to set a value for it, but the video input doesn't need to be in use.

To increase or decrease the value of a setting

Use the **set** command to increase or decrease the value by a designated number.

This example increases the contrast level by 5:

```
>set contrast +5
contrast=70
```

This example decreases the contrast level by 15:

```
>set contrast -15
contrast=55
```

SMART Board 8055i-G5-SMP and 8065i-G5-SMP command inventory

This section contains the commands for SMART Board 8055i-G5-SMP and 8065i-G5-SMP interactive flat panels.

Power state

Use the following commands to identify power state settings.

Command	Response	Possible values	Standby mode
get intpowerstate	intpowerstate=*[Value]*	on standby dpms novideo confirm proximitywait welcome	Yes
get powerstate	powerstate=*[Value]*	on off standby	Yes

Use the following commands to assign power state settings.

Command	Possible values	Response	Standby mode
set powerstate *[Value]*	=on =off =standby	powerstate=*[Value]*	Yes

Source

Use the following commands to identify source settings.

Command	Response	Possible values	Standby mode
get input	input=*[Value]*	hdmi1 ops/hdmi2	Yes
get videoinputs	videoinputs=*[Value]*	hdmi1 ops/hdmi2	Yes

Use the following commands to assign source settings.

Command	Possible values	Response	Standby mode
set input *[Value]*	=hdmi1 =ops/hdmi2 =next	input=*[Value]*	Yes

Video

Use the following commands to identify video settings.

Command	Response	Possible values	Standby mode
get displaymode	displaymode=*[Value]*	standard user dynamic	No
get contrast	contrast=*[Value]*	0–100	No
get brightness	brightness=*[Value]*	0–100	No
get tint	tint=*[Value]*	0–100	No
get sharpness	sharpness=*[Value]*	0–100	No

Command	Response	Possible values	Standby mode
get colortemp	colortemp=*[Value]*	normal warm cool user	No
get red	red=*[Value]*	0–100	No
get green	green=*[Value]*	0–100	No
get blue	blue=*[Value]*	0–100	No
get blacklevel	blacklevel=*[Value]*	0–100	No

Use the following commands to assign video settings.

Command	Possible values	Response	Standby mode
set displaymode *[Value]*	=standard =user =dynamic	displaymode=*[Value]*	No
set contrast *[Value]*	+*[Incremental value]* -*[Incremental value]* =0–100	contrast=*[Value]*	No
set brightness *[Value]*	+*[Incremental value]* -*[Incremental value]* =0–100	brightness=*[Value]*	No
set tint *[Value]*	+*[Incremental value]* -*[Incremental value]* =0–100	tint=*[Value]*	No
set sharpness *[Value]*	+*[Incremental value]* -*[Incremental value]* =0–100	sharpness=*[Value]*	No
set colortemp *[Value]*	=normal =warm =cool =user	colortemp=*[Value]*	No
set red *[Value]*	+*[Incremental value]* -*[Incremental value]* =0–100	red=*[Value]*	No
set green *[Value]*	+*[Incremental value]* -*[Incremental value]* =0–100	green=*[Value]*	No
set blue *[Value]*	+*[Incremental value]* -*[Incremental value]* =0–100	blue=*[Value]*	No

Command	Possible values	Response	Standby mode
set blacklevel *[Value]*	+*[Incremental value]* -*[Incremental value]* =0–100	blacklevel=*[Value]*	No
set picturereset *[Value]*	=yes	picturereset=*[Value]*	No

Audio

Use the following commands to identify audio settings.

Command	Response	Possible values	Standby mode
get volume	volume=*[Value]*	0–100	No
get mute	mute=*[Value]*	on off	No
get audioinput	audioinput=*[Value]*	usbaudio HDMI OPSdigital	No
get treble	treble=*[Value]*	0–100	No
get bass	bass=*[Value]*	0–100	No
get audioeq120	audioeq120=*[Value]*	0–100	No
get audioeq500	audioeq500=*[Value]*	0–100	No
get audioeq1200	audioeq1200=*[Value]*	0–100	No
get audioeq7500	audioeq7500=*[Value]*	0–100	No
get audioeq12k	audioeq12k=*[Value]*	0–100	No
get balance	balance=*[Value]*	0–100	No

Use the following commands to assign audio settings.

Command	Possible values	Response	Standby mode
set volume *[Value]*	+*[Incremental value]* -*[Incremental value]* =0–100	volume=*[Value]*	No
set mute *[Value]*	=on =off	mute=*[Value]*	No
set audioinput *[Value]*	=usbaudio =HDMI =OPSDigital	audioinput=*[Value]*	No

Command	Possible values	Response	Standby mode
set treble *[Value]*	+*[Incremental value]* -*[Incremental value]* =0–100	treble=*[Value]*	No
set bass *[Value]*	+*[Incremental value]* -*[Incremental value]* =0–100	bass=*[Value]*	No
set audioeq120 *[Value]*	=0–100	audioeq120=*[Value]*	No
set audioeq500 *[Value]*	=0–100	audioeq500=*[Value]*	No
set audioeq1200 *[Value]*	=0–100	audioeq1200=*[Value]*	No
set audioeq7500 *[Value]*	=0–100	audioeq7500=*[Value]*	No
set audioeq12k *[Value]*	=0–100	audioeq12k=*[Value]*	No
set balance *[Value]*	+*[Incremental value]* -*[Incremental value]* =0–100	balance=*[Value]*	No
set soundreset *[Value]*	=yes	soundreset=*[Value]*	No

System information

Use the following commands to identify system information settings.

Command	Response	Possible values	Standby mode
get autopoweroff	autopoweroff=*[Value]*	15–240	No
get fwverscr	fwverscr=*[Value]*	*[Scalar version firmware number]*	Yes
get fwvertouch	fwvertouch=*[Value]*	*[Touch controller firmware version number]*	Yes
get serialtouch	serialtouch=*[Value]*	*[Touch controller serial number]*	No
get opsinfo	opsinfo=*[Value]*	OPS NO OPS	No

Command	Response	Possible values	Standby mode
get language[1]	language=*[Value]*	English Arabic Danish German Spanish Finnish French Hebrew Italian Dutch Norwegian Portuguese Russian Swedish Turkish Chinese_sim	No
get modelnum	modelnum=*[Value]*	*[Model number]*	No
get serialnum	serialnum=*[Value]*	*[Serial number]*	No
get proximityinstalled	proximityinstalled=*[Value]*	yes no	
get proximity	proximity=*[Value]*	on off	Yes
get proximityreenable	proximityreenable=*[Value]*	1–10	Yes
get proximitydetected	proximitydetected=*[Value]*	yes no	No
get monitorid	monitorid=*[Value]*	1–100	No

Use the following commands to assign system information settings.

Command	Possible values	Response	Standby mode
set autopoweroff *[Value]*	+*[Incremental value]* -*[Incremental value]* =15–240	autopoweroff=*[Value]*	No
set factoryreset *[Value]*	=yes	factoryreset=*[Value]*	Yes

[1]Languages for the on-screen display menu only

Command	Possible values	Response	Standby mode
set language *[Value]*[2]	=English =Arabic =Danish =German =Spanish =Finnish =French =Hebrew =Italian =Dutch =Norwegian =Portuguese =Russian =Swedish =Turkish =Chinese_sim	language=*[Value]*	No
set proximity *[Value]*	=on =off	proximity=*[Value]*	Yes
set proximityreenable *[Value]*	=1–10	proximityreenable=*[Value]*	Yes
set monitorid *[Value]*	+*[Incremental value]* -*[Incremental value]* =1–100	monitorid=*[Value]*	No
set lyncroom *[Value]*	=reset	lyncroom=*[Value]*	No
set touchdetected *[Value]*	=yes	touchdetected=*[Value]*	No

SMART Board 8065i-G5-SMP-V2 and 8075i-G5-SMP command inventory

This section contains the commands for SMART Board 8065i-G5-SMP-V2 and 8075i-G5-SMP interactive flat panels.

[2]Languages for the on-screen display menu only

Power state

Use the following commands to identify power state settings.

Command	Response	Possible values	Standby mode
get intpowerstate	intpowerstate=*[Value]*	on standby dpms novideo confirm proximitywait welcome	Yes
get powerstate	powerstate=*[Value]*	on off standby	Yes

Use the following commands to assign power state settings.

Command	Possible values	Response	Standby mode
set powerstate *[Value]*	=on =off =standby	powerstate=*[Value]*	Yes

Source

Use the following commands to identify source settings.

Command	Response	Possible values	Standby mode
get input	input=*[Value]*	hdmi1 hdmi2 displayport ops/hdmi ops/displayport	Yes
get videoinputs	videoinputs=*[Value]*	hdmi1 hdmi2 displayport ops/hdmi ops/displayport	Yes
get videoinputdetect	videoinputdetect=*[Value]*	ops/hdmi ops/displayport off	No

Use the following commands to assign source settings.

Command	Possible values	Response	Standby mode
set input *[Value]*	=hdmi1 =hdmi2 =displayport =ops/hdmi =ops/displayport =next	input=*[Value]*	Yes
set videoinputdetect *[Value]*	=ops/hdmi =ops/displayport =off	videoinputdetect=*[Value]*	No

Video

Use the following commands to identify video settings.

Command	Response	Possible values	Standby mode
get displaymode	displaymode=*[Value]*	standard user dynamic	No
get contrast	contrast=*[Value]*	0–100	No
get brightness	brightness=*[Value]*	0–100	No
get tint	tint=*[Value]*	0–100	No
get sharpness	sharpness=*[Value]*	0–100	No
get colortemp	colortemp=*[Value]*	normal warm cool user	No
get red	red=*[Value]*	0–100	No
get green	green=*[Value]*	0–100	No
get blue	blue=*[Value]*	0–100	No
get blacklevel	blacklevel=*[Value]*	0–100	No
get localdimming[3]	localdimming=*[Value]*	on off	No

[3]SMART Board 8075i-G5-SMP interactive flat panels only

Use the following commands to assign video settings.

Command	Possible values	Response	Standby mode
set displaymode *[Value]*	=standard =user =dynamic	displaymode=*[Value]*	No
set contrast *[Value]*	+*[Incremental value]* -*[Incremental value]* =0–100	contrast=*[Value]*	No
set brightness *[Value]*	+*[Incremental value]* -*[Incremental value]* =0–100	brightness=*[Value]*	No
set tint *[Value]*	+*[Incremental value]* -*[Incremental value]* =0–100	tint=*[Value]*	No
set sharpness *[Value]*	+*[Incremental value]* -*[Incremental value]* =0–100	sharpness=*[Value]*	No
set colortemp *[Value]*	=normal =warm =cool =user	colortemp=*[Value]*	No
set red *[Value]*	+*[Incremental value]* -*[Incremental value]* =0–100	red=*[Value]*	No
set green *[Value]*	+*[Incremental value]* -*[Incremental value]* =0–100	green=*[Value]*	No
set blue *[Value]*	+*[Incremental value]* -*[Incremental value]* =0–100	blue=*[Value]*	No
set blacklevel *[Value]*	+*[Incremental value]* -*[Incremental value]* =0–100	blacklevel=*[Value]*	No
set localdimming *[Value]*[4]	=on =off	localdimming=*[Value]*	No

[4]SMART Board 8075i-G5-SMP interactive flat panels only

Audio

Use the following commands to identify audio settings.

Command	Response	Possible values	Standby mode
get volume	volume=*[Value]*	0–100	No
get mute	mute=*[Value]*	on off	No
get balance	balance=*[Value]*	0–100	No

Use the following commands to assign audio settings.

Command	Possible values	Response	Standby mode
set volume *[Value]*	+*[Incremental value]* -*[Incremental value]* =0–100	volume=*[Value]*	No
set mute *[Value]*	=on =off	mute=*[Value]*	No
set balance *[Value]*	+*[Incremental value]* -*[Incremental value]* =0–100	balance=*[Value]*	No
set soundreset *[Value]*	=yes	soundreset=*[Value]*	No

Multi-Window

Use the following commands to identify Multi-Window settings.

Command	Response	Possible values	Standby mode
get mw	mw=*[Value]*	off dual quad	No
get mwaudioinput	mwaudioinput=*[Value]*	window1 window2 window3 window4	No
get mwwindow1input	mwwindow1input=*[Value]*	hdmi1 hdmi2 displayport opshdmi opshdmidisplayport	No

Command	Response	Possible values	Standby mode
get mwwindow2input	mwwindow2input=*[Value]*	hdmi1 hdmi2 displayport opshdmi opshdmidisplayport	No
get mwwindow3input	mwwindow3input=*[Value]*	hdmi1 hdmi2 displayport opshdmi opshdmidisplayport	No
get mwwindow4input	mwwindow4input=*[Value]*	hdmi1 hdmi2 displayport opshdmi opshdmidisplayport	No

Use the following commands to assign Multi-Window settings.

Command	Possible values	Response	Standby mode
set mw *[Value]*	=off =dual =quad	mw=*[Value]*	No
set mwaudioinput *[Value]*	=window1 =window2 =window3 =window4	mwaudioinput=*[Value]*	No
set mwwindow1input *[Value]*	=hdmi1 =hdmi2 =displayport =opshdmi =opshdmidisplayport	mwwindow1input=*[Value]*	No
set mwwindow2input *[Value]*	=hdmi1 =hdmi2 =displayport =opshdmi =opshdmidisplayport	mwwindow2input=*[Value]*	No
set mwwindow3input *[Value]*	=hdmi1 =hdmi2 =displayport =opshdmi =opshdmidisplayport	mwwindow3input=*[Value]*	No

Command	Possible values	Response	Standby mode
set mwwindow4input *[Value]*	=hdmi1 =hdmi2 =displayport =opshdmi =opshdmidisplayport	mwwindow4input=*[Value]*	No

System information

Use the following commands to identify system information settings.

Command	Response	Possible values	Standby mode
get autopoweroff	autopoweroff=*[Value]*	15–240	No
get fwverscr	fwverscr=*[Value]*	*[Scalar version firmware number]*	Yes
get fwvertouch	fwvertouch=*[Value]*	*[Touch controller firmware version number]*	Yes
get serialtouch	serialtouch=*[Value]*	*[Touch controller serial number]*	No
get opsinfo	opsinfo=*[Value]*	OPS NO OPS	No
get usb	usb=*[Value]*	hdmi1 hdmi2 displayport ops	No
get language[5]	language=*[Value]*	English Arabic Danish German Spanish Finnish French Hebrew Italian Dutch Norwegian Portuguese Russian Swedish Turkish Chinese_sim	No

[5]Languages for the on-screen display menu only

Command	Response	Possible values	Standby mode
get modelnum	modelnum=*[Value]*	*[Model number]*	No
get serialnum	serialnum=*[Value]*	*[Serial number]*	No
get proximityinstalled	proximityinstalled=*[Value]*	yes no	
get proximity	proximity=*[Value]*	on off	Yes
get proximityreenable	proximityreenable=*[Value]*	1–10	Yes
get proximitydetected	proximitydetected=*[Value]*	yes no	No
get monitorid	monitorid=*[Value]*	1–100	No
get powersave	powersave=*[Value]*	on off	No
get fbc	fbc=*[Value]*	on off	No
get waketotouch	waketotouch=*[Value]*	on off	No

Use the following commands to assign system information settings.

Command	Possible values	Response	Standby mode
set autopoweroff *[Value]*	+*[Incremental value]* -*[Incremental value]* =15–240	autopoweroff=*[Value]*	No
set factoryreset *[Value]*	=yes	factoryreset=*[Value]*	Yes

Command	Possible values	Response	Standby mode
set language *[Value]*[6]	=English =Arabic =Danish =German =Spanish =Finnish =French =Hebrew =Italian =Dutch =Norwegian =Portuguese =Russian =Swedish =Turkish =Chinese_sim	language=*[Value]*	No
set proximity *[Value]*	=on =off	proximity=*[Value]*	Yes
set proximityreenable *[Value]*	=1–10	proximityreenable=*[Value]*	Yes
set monitorid *[Value]*	+*[Incremental value]* -*[Incremental value]* =1–100	monitorid=*[Value]*	No
set lyncroom *[Value]*	=reset	lyncroom=*[Value]*	No
set touchdetected *[Value]*	=yes	touchdetected=*[Value]*	No
set powersave *[Value]*	=on =off	powersave=*[Value]*	No
set fbc *[Value]*	=on =off	fbc=*[Value]*	No
set waketotouch *[Value]*	=on =off	waketotouch=*[Value]*	No

[6]Languages for the on-screen display menu only

Appendix C

Hardware environmental compliance

SMART Technologies supports global efforts to ensure that electronic equipment is manufactured, sold and disposed of in a safe and environmentally friendly manner.

Waste Electrical and Electronic Equipment (WEEE)

Electrical and electronic equipment contain substances that can be harmful to the environment and to human health. The crossed-out wheeled bin symbol indicates that products should be disposed of in the appropriate recycling stream and not as regular waste.

More information

See smarttech.com/compliance for the materials table.

Index

A

air conditioning, 16, 35
AM30 appliance, 9
angle (mounting), 15
aspect ratio, 5
audio
    about, 3
    configuring, 45, 49, 60, 67
    controlling volume, 6
    muting, 6
    troubleshooting, 41

B

balance, audio, 46, 49, 60, 67
bass, 45, 60
black level, 45, 48, 59, 65
brightness, 45, 48, 58, 65

C

calibration, 24, 31
cameras
    about, 5
    cleaning, 33
chemicals, 33
cleaning
    camera windows, 33
    presence detection sensor, 34
    reflective tape, 33
    screen, 33
color temperature, 59, 65
computer
    connecting, 20
condensation, 35
connector panel, 17
contrast, 45, 48, 58, 65

D

documentation, 10
dry-erase markers, 33
dust, 15, 33-34

E

eraser, 7

F

factory reset, 47, 50
    SMART kapp iQ 55 and 65 boards, 47
firmware updates, 28
front control panel, 6

G

gestures, 3
glass cleaner, 33

H

hardware installation, 13, 32
hardware removal, 35
HDMI, 20, 58
height for mounting the interactive flat panel, 16
humidity, 34-35

I

I/O extension module
    about, 9
    connectors, 17

installation instructions, 11

K

knowledge base, 10

L

languages, 46, 49, 62, 69
local building codes, 14
location for mounting the interactive flat panel, 15

M

M8 screws, 14
maintenance, 27
markers, 33
menu control panel, 43
mounting instructions, 13
multitouch capabilities, 3
multiuser sketch support, 3

O

object awareness, 3
on-screen display menu, 43
orientation, 24, 30

P

packaging, 36
Pen ID, 3
pens
- about, 7
- maintaining, 35

permanent markers, 33
power, 15, 19, 23, 55, 57, 64
presence detection sensor
- about, 8
- cleaning, 34
- configuring, 62, 70
- troubleshooting, 37

R

recessed areas, 16
reflective tape channel, 5, 33
remote management, 53
reset, 27
room control, 53
RS-232, 53

S

serial number, 41, 47, 51, 61, 69
sharpness, 45, 48, 58, 65
SMART Connection Wizard, 24, 41
SMART Diagnostics, 42
SMART Ink
- about, 9
- installing, 24
- updating, 29

SMART kapp iQ functionality
- about, 3
- installing the AM30 appliance for, 9

SMART Meeting Pro software
- about, 10
- installing, 24
- updating, 29

SMART Product Drivers
- about, 9
- installing, 24
- updating, 29

SMART Product Update, 29
SMART Settings, 30
smoke, 34
software installation, 24
software updates, 29
speakers
- built-in, 3, 8, 60, 67
- external, 22

specifications, 10
stand, 36
Standby mode, 46, 49, 55, 57, 64
sunlight, 35
Support center, 10

T

tint, 58, 65
training, 10
transportation, 36
treble, 45, 60

U

updates
    firmware, 28
    software, 29
USB cables and connectors, 8, 20

V

vacuum cleaners, 34
ventilation, 16, 34
vertical mounting, 15
VESA mounting plate, 14
vibrations, 15

W

water, 33
WEEE Directives, 73

SMART TECHNOLOGIES

smarttech.com/support

smarttech.com/contactsupport

smarttech.com/kb/170814