SMART Document Camera™ 550

User guide

Was this document helpful?
smarttech.com/docfeedback/171225

Learn more

This guide and other resources for SMART Document Camera 5550 are available in the Support section of the SMART website (smarttech.com/support). Scan this QR code to view these resources on your mobile device.

FCC warning

This equipment has been tested and found to comply with the limits for a Class A digital device, pursuant to Part 15 of the FCC Rules. These limits are designed to provide reasonable protection against harmful interference when the equipment is operated in a commercial environment. This equipment generates, uses, and can radiate radio frequency energy and, if not installed and used in accordance with the manufacturer's instructions, may cause harmful interference to radio communications. Operation of this equipment in a residential area is likely to cause harmful interference in which case the user will be required to correct the interference at his own expense.

Trademark notice

SMART Board, smarttech, the SMART logo and all SMART taglines are trademarks or registered trademarks of SMART Technologies ULC in the U.S. and/or other countries. All third-party product and company names may be trademarks of their respective owners.

Copyright notice

© 2022 SMART Technologies ULC. All rights reserved. No part of this publication may be reproduced, transmitted, transcribed, stored in a retrieval system or translated into any language in any form by any means without the prior written consent of SMART Technologies ULC. Information in this manual is subject to change without notice and does not represent a commitment on the part of SMART.

This product and/or use thereof is covered by one or more of the following U.S. patents:

www.smarttech.com/patents

March 30, 2022

Important information

Caution

- Place your SMART product on a solid surface to prevent it from falling.
- If you have a security cable attached to your SMART product, do not carry or swing your SMART product by the security cable.
- Do not connect non-shielded interface cables to your SMART product and do no leave cables connected to unused connectors, because this can cause interference level that exceed FCC regulations.
- Avoid setting up and using the SMART product in an area with excessive levels of dust, humidity and smoke.
- Do not block or cover the opening or slots on your SMART product. These slots provide ventilation, ensure reliable operation and protect your SMART product from overheating.
- Do not carry your SMART product by the camera arm. Carry it by the base of the unit.
- Do not aim the camera lens at the sun.
- If your SMART product requires replacement parts, make sure the service technician uses replacement parts specified by SMART Technologies or parts with the same characteristics as the original.
- Ensure that batteries are stored in a cool and dry place.
- Do not discard batteries in water, fire, or domestic waste. Dispose batteries at collection points.
- Remove the batteries in the remote control if you are not in for an extended period of time. Battery corrosion or leakages can damage the remote control.
- Do not mix new and used batteries.
- Do not mix different types of batteries: alkaline, nickel-cadmium (rechargeable), or carbon-zine.

Contents

Important information 3

Chapter 1 Welcome 6

- About this guide 6
- Features 6
- Components 8
- Modes 15
- Software 15

Chapter 2 Getting started 17

- Setting up your document camera 17
- Connecting to different displays 19
- Turning your document camera on and off 21
- Connecting to a wireless network 22
- Connecting to external devices 26
- Shooting area, overhead light, and anti-glare sheet 28
- Using the external memory storage 28

Chapter 3 Using your document camera 30

- Understanding Camera, Computer Pass-Through, and Playback modes 30
- Features of each mode 31
- Setting document camera modes 32
- Displaying printed documents 33
- Using an SD/SDHC card 35

Chapter 4 Using your document camera in Camera mode 36

- Using Camera mode 36
- Using the on-screen display menu in Camera mode 37
- Capturing and transferring images and videos 44
- Using a microscope 46

Chapter 5 Using your document camera in Playback mode 47

- Setting your document camera to Playback mode 47
- Using the OSD menu in Playback mode 48

Chapter 6 Using your document camera with SMART software 52

- Connecting your document camera to SMART Notebook software 52
- Navigating SMART Notebook's Document Camera Viewer menu options 53
- Using a microscope with SMART Notebook software 54

Connecting your document camera to SMART Document Camera software 54
Navigating SMART Document Camera software's Viewer menu options 55

Chapter 7 Troubleshooting 57

Resolving general issues 58
Resolving image issues 58
Resolving software issues 59
Resolving recording issues 60
Resolving connection issues 60

Certification and compliance 61

Chapter 1 **Welcome**

About this guide 6
Features 6
Components 8
Control panel 9
Right panel 11
Left panel 11
Rear panel 12
Remote control 13
Power adapter 14
USB cable 15
WiFi dongle 15
Microscope adapter 15
Anti-glare sheet 15
Modes 15
Software 15
SMART Notebook software and SMART Product Drivers 16
Download SMART Document Camera software 16

This chapter introduces the SMART Document Camera™ 550.

About this guide

This guide is for users who set up and use the SMART Document Camera 550 in their organizations.

It includes information on the document camera's on-screen display menu, remote control, and basic troubleshooting.

Features

The SMART Document Camera 550 can transform any classroom or lecture hall into a collaborative and interactive learning environment. The document camera enables you to capture and display printed documents, microscope slides, videos, and 3D objects on your computer, projector or display panel.

The document camera includes the following features:

Feature	Feature
Camera	• High resolution CMOS sensor • 12X digital zoom • Up to 30 frames per second • Automatic or manual focus • Maximum shooting area 17 4/8" x 9 6/8"
Output/input	• HDMI 1080p @ 50 Hz / 60 Hz, 720p @ 50 Hz / 60 Hz, 1024 × 768p @ 60 Hz • USB mini-B (connect to computer) • WiFi • SD memory card • Internal memory
Physical construction	• Built-in battery • Built-in LED illumination lamp • Security lock slot • Flexible arm • Microphone integrated into base
Software	• SMART Notebook® collaborative learning software • SMART Document Camera software • SMART Product Drivers
Image and video storage	• Supports SD/SDHC cards (maximum 32 GB) • Supports USB mass storage mode for internal memory and SD card

For more information, see the SMART Document Camera 550 specifications (smarttech.com/kb/171224).

Components

The SMART Document Camera has a flexible arm to position the lens at any angle. The camera head has LED overhead lighting to enhance lighting conditions.

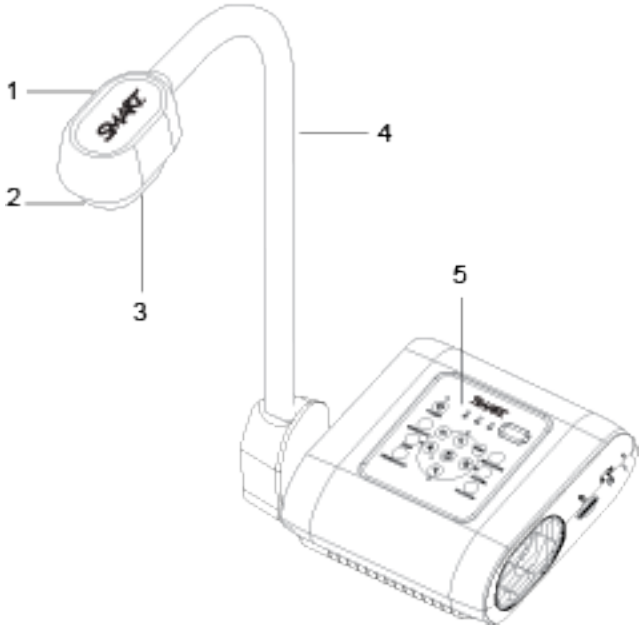

The SMART Document Camera 550 consists of the following components:

No.	Name
1	Camera head
2	Camera lens
3	LED light
4	Camera arm
5	Control panel

Control panel

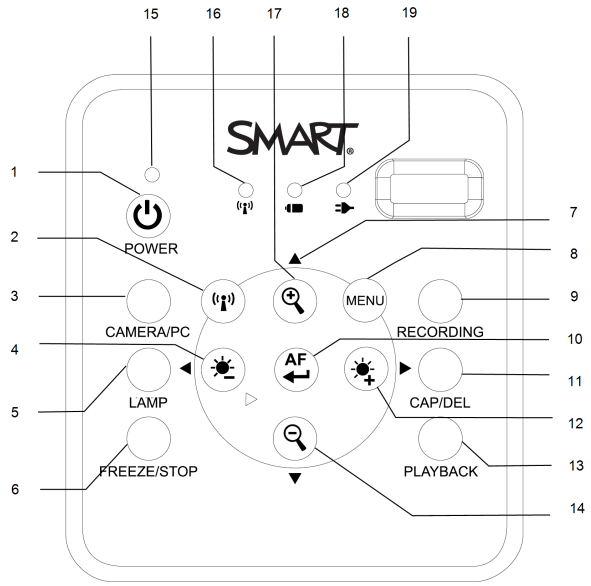

The control panel to enables you to switch between Camera, Computer Pass-Through, and Playback modes. Additionally, using the control panel allows you to adjust the settings and features in the Camera mode's on-screen display (OSD) menu.

The control panel of the document camera consists of the following:

No.	Name	More information
1	Power	Power ON/OFF the document camera
2	WiFi/USB mode	Switch between WiFi and USB mode
3	Camera/PC mode	Switch the video signal between a computer and camera with the use of the HDMI IN port
4	Brightness decrease	Decrease the level of brightness when capturing a live images
5	Lamp	Power ON/OFF the overhead light
6	Freeze/Stop	• Pause or resume an image frame in Camera mode • Stop video playback in Playback mode

No.	Name	More information
7	Navigation arrows	• Access options from the OSD menu • Adjust the volume of a video play back by using ▲ and ▼ • Fast-forward to rewind a video by using ◀ and ▶
8	Menu	Access the OSD menu
9	Recording	Start or stop recording video and audio
10	Auto-Focus	• Automatically adjust focus • Selection option for Playback mode and OSD menu • Start or pause video playback
11	Capture/Delete	• Capture an image in Camera mode • Delete image or video in Playback mode
12	Brightness increase	Increase the level of brightness when capturing a live images
13	Playback	View captured images and videos
14	Zoom out	Decrease the image magnification in Camera and picture Playback mode
15	Power indicator	• Solid red: Standby • Flashing red: Power on • Solid green: HDMI output • Solid orange: TV output
16	WiFi connection indicator	• Flashing orange: Searching for Access Point • Solid blue: Connected to Access Point • Flashing blue: Camera can be accessed wirelessly
17	Zoom in	Increase the image magnification on Camera and picture Playback mode
18	Battery life indicator	• Solid green: Battery is over 40% • Solid orange: Battery is between 20%-40% • Solid red: Battery is between 5%-20% • Flashing red: Battery is lower than 5%
19	Battery charge indicator	• Solid red: Power plug is connected and battery is charging • Solid green: Battery is fully charged • Off: Power plug is not connected

Right panel

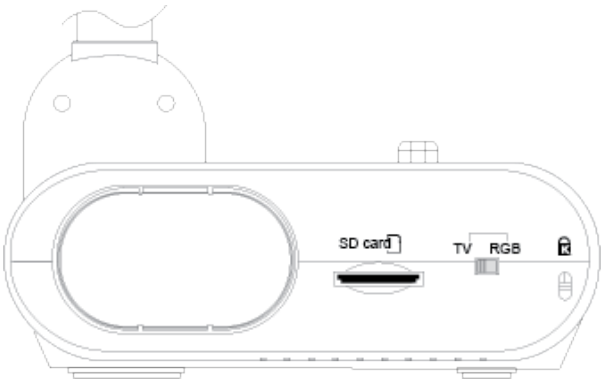

The right panel of the document camera consists of the following:

No.	Name	More information
1	Camera holder	Holds the camera head for storage
2	SD card slot	SD/SDHC memory card slot
3	TV-RGB switch	Switch between TV and output display video
4	Security lock slot	Attachment for a Kensington compatible lock

Left panel

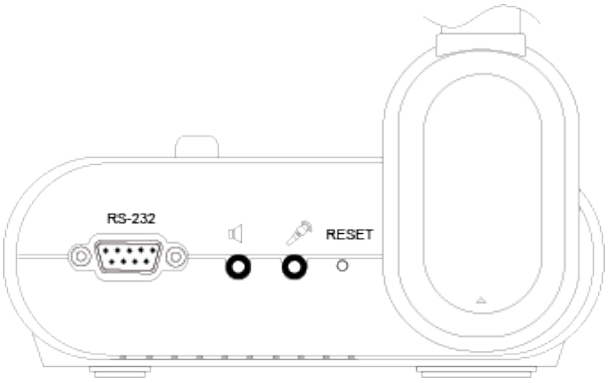

The left panel of the document camera consists of the following:

No.	Name	More information
1	RS-232	Connect to a computer serial port
2	Speaker	Connect to an amplified speaker

No.	Name	More information
3	MIC	Connect to microphone **Note** The built-in microphone will be disabled once the external microphone is connected to the document camera.
4	Reset	Resetting the document camera will set it back to standby mode

Rear panel

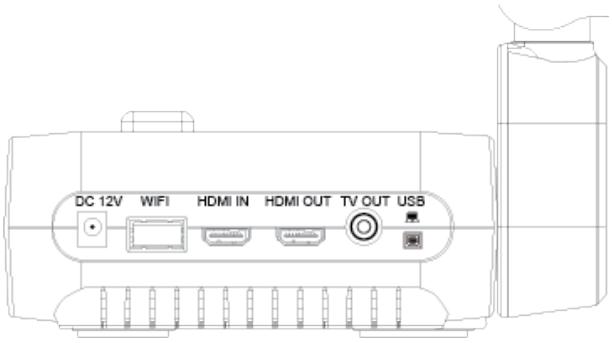

The rear panel of the document camera consists of the following connectors:

No.	Name	More information
1	DC 12V	Connect the power adapter
2	WiFi dongle port	Connect the WiFi dongle
3	HDMI IN	Connect to an external HDMI source
4	HDMI OUT	• Connect as an output video signal to a monitor or projector • HDMI OUT is used to transmit high definition images
5	TV OUT	• Connect to a device with a TV output • TV OUT is used to transmit standard definition images
6	USB mini-B	Connect to a computer

Remote control

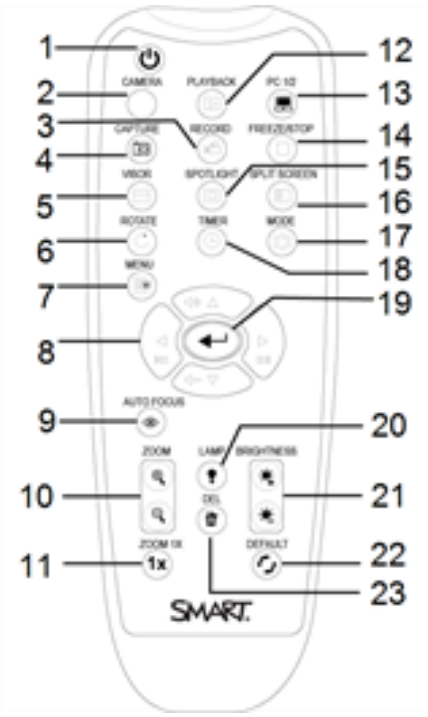

All features of the SMART Document Camera 550 can be accessed with the remote control. The remote control requires two AAA batteries.

No.	Name	More information
1	Power	Power ON/OFF the document camera
2	Camera	Camera mode displays the video signal from the document camera
3	Record	Start or stop recording video and audio
4	Capture	Capture still image in Camera mode. When in continuous capture mode, press this button again to stop
5	Visor	Hide parts of the presentation screen
6	Rotate	Rotate an image in Camera or Playback mode
7	Menu	Access the OSD menu

No.	Name	More information
8	Navigate arrows	• Adjust the volume of a video play back by using ▲ and ▼ • Fast-forward to rewind a video by using ◀ and ▶ • Adjust the spotlight frame and visor screen coverage
9	Auto-focus	Automatically adjust focus
10	Zoom In/Out	Increase or decrease the image magnification on camera and picture Playback mode
11	Zoom reset	Reset zoom default magnification to 100%
12	Playback	View captured images and videos
13	PC 1/2	Displays the video signal from HDMI input of the document camera
14	Freeze/Stop	• Pause or resume an image frame in Camera mode • Stop video playback in Playback mode
15	Spotlight	Adjust the size, shade, and color of the spotlight
16	Split screen	Displays a split screen. One side displays live image from the camera and the other side displays thumbnails of images/video
17	Mode	Switch between text, graphics and microscope mode
18	Timer	Select timer duration
19	Video playback	• Make a selection in Playback mode and OSD menu • Play/Pause video playback
20	Lamp	Power ON/OFF the overhead light
21	Brightness	Increase or decrease the level of brightness when capturing a live images
22	Default	Reset back to factory default settings
23	Delete	Delete image or video in Playback mode

Power adapter

Your document camera comes with a power adapter, including a country specific connector that connects to the external power supply. Plug adapters are available for Australia, Europe, and North America.

USB cable

Use the USB cable to connect your document camera to your computer. You can display objects, capture images to SMART Notebook files, and control your document camera from SMART Notebook software.

See the *Troubleshooting and extending USB 2.0 and USB 3.0 connection* knowledge base article for more information.

WiFi dongle

Use the WiFi dongle to connect your document camera to the network.

Microscope adapter

Your document camera comes with a microscope adapter along with two different sized rubber couplers for the microscope eyepiece.

Anti-glare sheet

Place the anti-glare sheet over printed documents to reduce glare.

Modes

Your document camera has three modes you can use to control how data is sent to a computer, projector, monitor, or display.

- Camera mode controls your document camera from the control panel and displays images on a projector, monitor, or display.
- Computer Pass-Through mode displays the video signal from the HDMI input on a projector, monitor, or display.
- Playback mode lets you control your document camera from the Control Panel and displays image from an SD/SDHC card or USB drive on a connected projector, monitor, or display.

Software

Before using your document camera, download the required software to get the most out of your document camera.

Important

- Before connecting your document camera to a computer, ensure the latest versions of SMART Notebook and SMART Product Drivers are installed.

- The document camera is only compatible with SMART Notebook software through a wired connection.
- The SMART Document Camera software can be used through both a wireless and wired connection.

SMART Notebook software and SMART Product Drivers

SMART Notebook collaborative learning software and SMART Product Drivers are required for the full functionality of the document camera. SMART Notebook software is a presentation tool that displays content captured by the document camera, and SMART Product Drivers enables the touch features of a SMART Board® interactive display, creating an interactive learning environment when a display is connected to the document camera.

Find system requirements for your computer in SMART Notebook software 18 release notes (smarttech.com/kb/171298).

Notes

- For more information about downloading SMART Notebook software, see the Installing and maintaining SMART Notebook 18 support page.
- For more information about downloading SMART Product Drivers, see the Installing and maintaining SMART Product Drivers 12 support page.

Download SMART Document Camera software

1. Go to smarttech.com/software.
2. Select **SMART Document Camera software for SMART Document Camera 550**.
3. Click **DOWNLOAD**.
4. Save the file to a temporary location.
5. Follow the on-screen instructions.

Chapter 2 **Getting started**

Setting up your document camera 17
Connecting to different displays 19
Setting the TV/RGB switch 20
Connecting to a high definition digital video display 20
Connecting to a standard definition analog video display 20
Turning your document camera on and off 21
Connecting to a wireless network 22
Connecting to a wireless network 22
Network recommendations 23
Connecting your document camera to Miracast 24
Using the Scan feature to find connectable devices 25
Connecting to external devices 26
Connecting your document camera to a microscope 26
Connecting your document camera to a microphone 27
Connecting your document camera to speakers 27
Shooting area, overhead light, and anti-glare sheet 28
Shooting area 28
Overhead light 28
Anti-glare sheet 28
Using the external memory storage 28

This chapter explains how to set up your document camera and how to connect it to different displays and devices. This chapter also explains how to use external memory storage.

Setting up your document camera

This section provides instructions on setting up your SMART Document Camera.

The document camera is designed with a flexible arm that enables you to position the camera head at different angles.

> **Note**
>
> Before setting up and connecting the document camera, ensure that all devices are powered off.

To unfold and position your document camera

1. Place a hand on the base of the document camera to stabilize it.
2. Press the camera head down, and then pull the camera arm outward and upward.

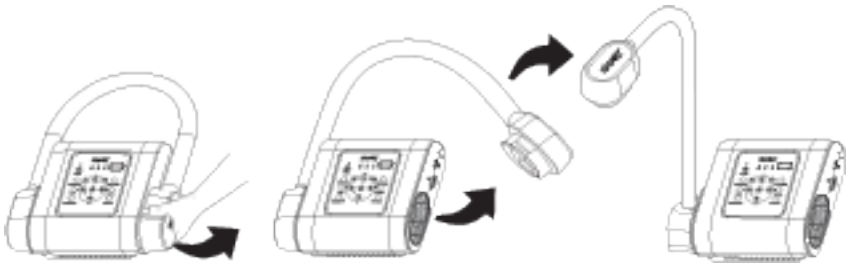

3. Move the camera head and aim the lens at your object.

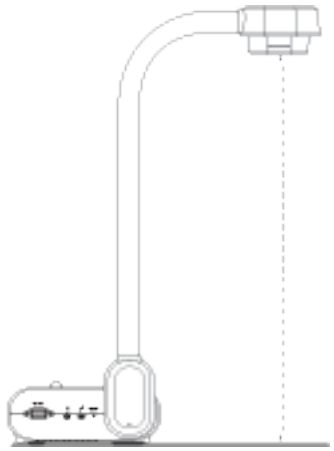

> ⚠ **Caution**
>
> Do not extend the camera head too far from the body, doing so can cause the unit to fall.

To connect your document camera to the power supply

1. Connect the power supply cable to the **DC 12V** port on the rear connection panel.
2. Connect the country-specific cable to the power supply.

   > ⚠ **Caution**
   >
   > Ensure the power cord is plugged into the camera as well as the wall.

3. Connect the plug to a power outlet.

   Once the power is connected, the document camera will enter standby mode.

4. Press ⏻ to power on the document camera.

To connect your document camera to a computer with a USB cable

1. Connect the USB cable to the **USB** port on the rear connection panel.
2. Locate the USB connector on the computer, and connect the USB cable.

> **Important**
>
> Ensure the WiFi indicator light is off before attempting to use the USB connection. If required, press the WiFi button on the control panel until the WiFi indicator light is off. For more information, see *Control panel* on page 9.

> **Note**
>
> For more information about extending USB connections, see the *Troubleshooting and extending USB 2.0 and USB 3.0 connection* knowledge base article.

To connect your document camera to computer with an HDMI cable

1. Connect the HDMI cable to the **HDMI IN** port on the rear connection panel.
2. Locate the **HDMI OUT** port on the computer, and connect the HDMI cable.

> **Notes**
>
> - Ensure the TV/RGB switch is set to **RGB**.
> - Use the control panel to switch the video signal to a computer, press the **Camera/PC** button.
> - Use the remote control to switch the video signal to a computer, press the **PC 1/2** button.

Connecting to different displays

After you complete the basic connections, you are ready to connect your document camera to an external display, which enables you to use the Camera and Playback modes and to access the on-screen display menu for these modes.

You can connect your document camera directly to an external display to enable the following functions:

- Use Camera mode to view a full-screen camera image on the external display.
- Use Playback mode to view a full-screen slide show on the external display.

> **Important**
>
> - To switch between NTSC and PAL video systems ensure your document camera is connected to the display using the HDMI connection. For more information on how to switch between the video systems see *Accessing the System menu* on page 43.

> - To use your document camera with SMART Notebook software ensure your document camera is connected to a computer.

Setting the TV/RGB switch

The TV/RGB switch determines the display output selection.

To set the switch to RGB

Set the switch to **RGB** (right)

when using an HDMI connection for signal output.

To set the switch to TV

Set the switch to **TV** (left)

when using an RCA connection for a composite output.

Connecting to a high definition digital video display

You can connect your document camera to a high-definition digital video display or projector with an HDMI cable (not supplied).

To connect your document camera to a high definition digital video display

1. Complete the basic connections. See *Setting up your document camera* on page 17.

   > **Tip**
   >
   > Make sure the TV/RGB switch is set to RGB.

2. Connect an HDMI cable to your document camera's **HDMI OUT** port and our display device's **HDMI IN** port.

Connecting to a standard definition analog video display

You can also connect your document camera to a standard definition analog video display or to video equipment to record your presentation with an RCA cable (not supplied).

To connect your document camera to a standard definition analog video display

1. Complete the basic connections (see *Setting up your document camera* on page 17).
2. Connect the RCA cable to your document camera's **TV OUT** port.
3. Connect the RCA cable to your TV's **VIDEO IN** port.

Turning your document camera on and off

After your completed the basic connections, you are ready to turn the document camera on and off.

To turn on your document camera

Press and hold the power button on the control panel or the remote control until the power indicator light changes from red to green.

> **Note**
>
> The document camera will take approximately a minute to turn on completely after the light changes to green.

To turn off your document camera

Press and hold the power button for three seconds on the control panel or remote control.

The power indicator light changes from solid green and then turns off.

> **Note**
>
> If you press and hold the power button for less than three seconds the document camera will enter standby mode.
> The power indicator light changes from solid green to solid red.

Connecting to a wireless network

The document camera's WiFi capability allows you to connect to a wireless network from anywhere in the classroom.

Create a collaborative learning environment where you can import and export images and videos while recording and sharing your lessons.

Connecting to a wireless network

Connect your document camera to WiFi and present images and videos from anywhere in the classroom. Before trying to connect to a wireless network, connect the WiFi dongle to the WiFi port on the rear panel of your document camera.

> **Important**
>
> Before setting up a WiFi connection for the first time, make sure your document camera is connected to a display.

To connect your document camera to a wireless network

1. Press the WiFi button on the control panel.

   The WiFi indicator light flashes orange.

   > **Note**
   >
   > For more information on the WiFi connection indicator light, see *WiFi connection indicator* on page 10.

2. Press the **MENU** button on the control panel or remote control.

   The OSD menu appears on your display.

3. Use the right arrow button ▶ on the control panel or remote control to navigate to the WiFi tab.

4. Select **WiFi Setup** and then press on the control panel or remote control.

   The *AP Settings* dialog box appears.

5. From the *SSID* menu select your wireless network and then press on the control panel or remote control.

6. Use the down arrow button ▼ on the control panel or remote to navigate to the Password field.

7. Enter the password for your wireless network and then press on the control panel or remote control.

8. Use the down arrow button ▼ on the control panel or remote to navigate to the Connect button.
9. Select the **Connect** button and then press ↵.

Network recommendations

The following are network recommendations:

- Your document camera works best in an 802.11n/ac environment using a 5 GHz network. However, it will also connect to older routers such as the 802.11 b/g/n 2.4 GHz.
- AES, TKIP, and AES+TKIP wireless encryption methods are supported.
- For WPA/WPA2 enterprise, the document camera only supports PEAP and not EAP-TLS, EAP-TTLS.
- Minimum required WiFi bandwidth is 0.16 Mbps and maximum bandwidth can be as high as 4.8 Mbps.

To get the most from your WiFi connection:

- Set your router's WiFi channel section to **Auto**.
- Don't use a *Hidden* WiFi network name.
- Update your WiFi router to the latest firmware.
- Check for sources of potential interference (microwave ovens, Bluetooth devices, faulty satellite television cables, power lines, cordless telephones, wireless speakers, flat-panel televisions, etc).
- Please check with your System or Network Administrator to make sure that the ports are not blocked in the WiFi router. The TCP/UDP ports in use are as follows:

Port	TCP/UDP	Usage	Descriptions
1900	UDP	uPnP SSDP Package	For detecting and removing the document camera
9527	TCP	Command	To send/receive commands between an iPad and the document camera
9528	TCP	Command	To register connections for an occupied document camera
8557	TCP	RTSP	To connect to the RTSP Stream
Random	RTP	RTP	For RTP connection
Random	RTCP	RTCP	For RTCP connection

Connecting your document camera to Miracast

> **Important**
>
> - You document camera must be connected to WiFi before you enable the Miracast setting.
> - Before setting up Miracast for the first time, make sure your document camera is connected to a display.
> - Press and hold the WiFi button on the control for 5 seconds to reconnect to the last Miracast receiver. Make sure that the Miracast mode is enabled.

To connect your document camera to Miracast

1. Press the WiFi button on the control panel.

   The WiFi indicator light flashes orange.

2. Press the **MENU** button on the control panel or remote control.

   The OSD menu appears on your display.

3. Use the right arrow button ▶ on the control panel or remote control to navigate to the **WiFi** tab.

4. Use the down arrow button ▼ on the control panel or remote control to navigate to **Wireless Mode** and then press ↵.

5. Select **Miracast** and then press ↵.

   Access to the Miracast setup option is now available.

   > **Important**
   >
   > If the Miracast setup option is not available, check the document camera's firmware version. The Miracast setup option is available only in firmware version 7 or higher.
   >
   > To check the firmware version, access the **System** tab and then navigate to the **Information**. See *Accessing the Setting menu* on page 41.

6. Use the down arrow button ▼ to navigate to **Miracast** and then press ↵.

7. Select **Setup** and then press ↵.

   The *Miracast Setting* window appears.

8. Select your remote device from the **Device** drop down menu.

   > **Note**
   >
   > If you don't see your remote device in the **Device** drop down menu, then use the **Scan** feature to search for your device. For more information on how to use the Scan feature, see *Using the Scan feature to find connectable devices* below.

9. If required, enter the **Pin Code** for your document camera and then press ↵.
10. Navigate to **Connect**, and then press ↵.
11. Navigate to **OK**, and then press ↵.

    The document camera is now connected to Miracast.

Using the Scan feature to find connectable devices

Use the document camera's **Scan** feature to search for devices that you can connect to the document camera using Miracast.

> **Important**
>
> You must connect your document camera to WiFi before using the Scan feature.

To use the Scan feature to find connectable devices

1. Complete steps 1-7 from *Connecting your document camera to Miracast* on the previous page.
2. Use the down arrow button ▼ on the control panel or remote control to navigate to **Scan** and then press ↵.
3. Navigate to the **Device** drop down menu and then press ↵.
4. Use the down arrow button ▼ on the control panel or remote control to browse the list of connectable devices.

Connecting to external devices

You can connect your document camera directly to the following external devices:

- Microscope
- Microphone
- Speakers

Connecting your document camera to a microscope

Connect your document camera to a microscope to examine microscopic objects on a bigger screen.

To connect a microscope

1. Select the appropriate rubber coupler size for the microscope eyepiece and insert it in the microscope adapter.

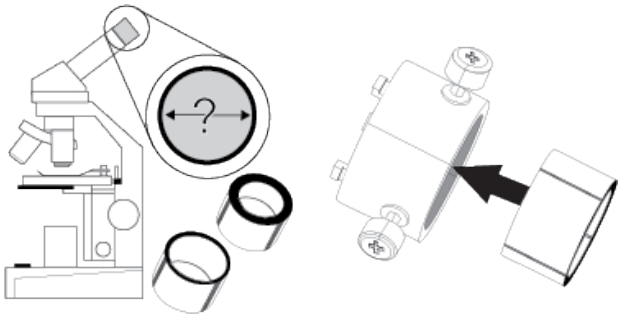

2. Attach the microscope adapter to the microscope eyepiece.
3. Tighten the three bolts until the adapter secures the eyepiece.

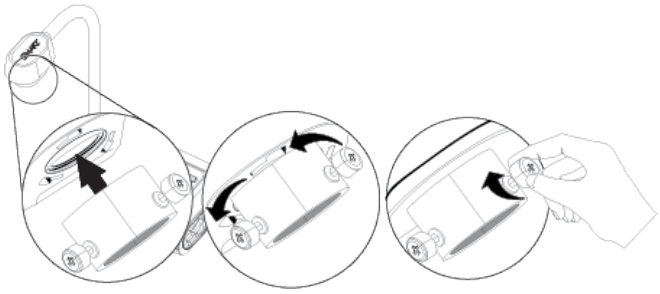

4. Attach the microscope adapter to the camera head.
5. Connect the document camera to the microscope.

> **Important**
>
> Make sure the arrow on the camera head and microscope adapter are on the same side.

6. Turn the microscope adapter counterclockwise to line up the arrows and lock the microscope adapter in place.

To optimize microscope images

1. Press the **MENU** button in the control panel, and then select the **Image** tab.
2. Use the down arrow button ▼ on the control panel or remote control to select the **Mode** sub-menu, and then press ↵.
3. Use the right arrow button ▶ on the control panel or remote control to select the microscope option, and then press ↵.
4. Adjust and aim the camera head at the furthest point, and then press the **AUTO FOCUS** button on the control panel or remote control.
5. Adjust the focus of the microscope.
6. Connect the other end of the HDMI cable to the **HDMI IN** connector on your projector or display.
7. Set the TV/RGB switch on the right-side connection panel to **RGB**.

Connecting your document camera to a microphone

You can connect an external microphone to your document camera.

Notes

- The built-in microphone on the control panel is disabled when an external microphone is connected.
- The audio is in monophonic sound.

To connect speakers

Connect the microphone's cable to the microphone on your document camera's left-side connection panel.

⚠ **Caution**

Turn the volume down to prevent hearing damage when using earphones.

Connecting your document camera to speakers

You can connect speakers to your document camera. Only audio from the video playback is supported.

To connect a speakers

Connect the speakers' 3.5 mm cable to the speaker receptacle on your document camera's left side connection panel.

Shooting area, overhead light, and anti-glare sheet

Shooting area

The shooting area can view a maximum area of 17 4/8" x 9 6/8" (44.5 cm x 24.8 cm).

To rotate the image

Adjust the camera head to shooting area, and press ROTATE on the control panel or remote control.

To mirror the image

1. Press the **MENU** button on the control panel, and then select the **Image** tab.
2. Use the down arrow button ▼ on the control panel or remote control to select **MIRROR**.
3. Press ↵ and select **ON**.
4. Press the **MENU** button on the control panel to close the menu.

Overhead light

The camera head has a bright LED overhead light to enhance the lighting condition.

To power on the overhead light

Press the **LAMP** button on your document camera's control panel or remote control to power the overhead light on and off.

Anti-glare sheet

The anti-glare sheet is a special coated film that helps eliminate any glare that could be encountered while displaying glossy objects, such as magazines and photos. Place the anti-glare sheet on top of an object to reduce reflected light.

Using the external memory storage

Your document camera supports an SD/SDHC card for image capture, audio, and video recording.

Notes

- Your document camera support SD/SDHC cards from 1 GB up to 32 GB.
- Recordings are in MP4 format.
- An SDHC card with class-6 or higher is recommended for high-quality recording.

Your document camera detects when an external storage device is connected and automatically switches to the last detected storage. If no external storage device is connected, all captured images are saved in the built-in memory.

To insert an SD card

Insert the card with the label facing up until it reaches the end and clicks into place. To remove the card, push to eject and pull the card out.

Important

Your document camera comes with piece of plastic inserted in the SD card slot. Remove this piece of plastic before you insert your SD/SDHC card.

Chapter 3 **Using your document camera**

Understanding Camera, Computer Pass-Through, and Playback modes 30
Camera mode 30
Computer Pass-Through mode 31
Playback mode 31
Features of each mode 31
Setting document camera modes 32
Setting your document camera to Camera mode 32
Setting your document camera to Computer Pass-Through mode 33
Setting your document camera to Playback mode 33
Displaying printed documents 33
Displaying printed documents 33
Reducing glare 33
Optimizing the image 34
Using an SD/SDHC card 35

This chapter provides information on using your document camera and introduces you to the different camera modes.

Understanding Camera, Computer Pass-Through, and Playback modes

You can use your document camera in Camera, Computer Pass-Through, or Playback mode. Each mode enables you to complete different functions and requires a specific connection to either a display, a projector, or a computer.

Camera mode

In Camera mode, you can view document camera images only in SMART Notebook software and SMART Document Camera software.

Camera mode allows connection over a USB and live image output. You can view full-screen images from your document camera using a projector or high definition display without a computer.

Use SMART Notebook software to save images and then present them at a later time, or if your computer is connected to an interactive whiteboard, projector, or television, you can deliver your SMART Notebook presentation with live images from your document camera.

> **Note**
>
> The Capture button on the control panel saves document camera images to the SMART Notebook page and closes the *SMART Document Camera* window. Pressing the Capture button again will re-open the *SMART Document Camera* window.

You can use the Camera mode's on-screen display menu for greater control of the image.

Computer Pass-Through mode

Computer Pass-Through mode switches your document camera's video output to HDMI. You can switch between the live camera images and your computer screen images.

> **Notes**
>
> - The Capture button on the control panel has no effect in Computer Pass-Through mode.
> - In Computer Pass-Through mode, you can only view the document camera live image in SMART Notebook software.

Playback mode

In Playback mode you can view full-screen images and slide shows from the memory card on a projector or high-definition display without a computer. You can't save images in Playback mode.

Features of each mode

The following table describes the differences between each mode.

Feature description	Camera mode	Computer Pass-Through mode	Playback mode
View computer input	No	Yes	No
View document camera image	Yes	No	No
View pictures from a memory card	No	No	Yes
Access an internal memory and SD/SDHC card from the computer with a USB cable	Yes	Yes	No

Feature description	Camera mode	Computer Pass-Through mode	Playback mode
Control the document camera from a computer	Yes	Yes	No
Capture to SMART Notebook software	Yes	No	No
Capture to an SD/SDHC memory card	Yes	No	No
Access the related on-screen display menu	Yes	No	No
Capture to a USB drive	Yes	No	No

The following table describes outputs when your document camera is connected to a display with HDMI, USB, or Composite Video Out.

Feature description	Camera mode	Computer Pass-Through mode	Playback mode
Connect to a projector or display (HDMI and USB output)	Camera image	HDMI IN	Memory card images
Connect to a USB output projector or a display	Camera image	N/A	Memory card images
Connect to a TV (composite video out)	Camera image	N/A	Memory card images

Setting document camera modes

Setting your document camera to Camera mode

1. Connect your document camera to your computer with the USB cable.
2. Set the TV/RGB to **RGB** on the right side of the connection panel.
3. Connect your document camera to a projector, monitor, or TV with an HDMI cable.
4. Press the **CAMERA/PC** button on the control panel.

   OR

   Press the **CAMERA** button on the remote control.

Setting your document camera to Computer Pass-Through mode

1. Connect your document camera to your computer with the USB cable.
2. Connect your computer with the HDMI cable to your document camera's **HDMI IN** receptacle.
3. Connect your display device with another HDMI cable to your document camera's **HDMI OUT** receptacle.
4. Press the **CAMERA/PC** button on the control panel or remote control.

   OR

   Press the **PC 1/2** button on the remote control.

Setting your document camera to Playback mode

1. Disconnect the USB cable from the rear connection panel.
2. Connect your document camera to a projector or a monitor with the HDMI cable or to a TV with the composite video adapter cable.
3. Press the **PLAYBACK** button on the control panel or remote control.

Displaying printed documents

When you set your document camera to Camera mode, you can display printed documents. Use the anti-glare sheet to reduce glare and optimize image quality.

Displaying printed documents

To display printed documents

1. Place your documents on the table.
2. Adjust the document camera, and then aim its lens at your documents.
3. Press **AUTO FOCUS** on the control panel to adjust the focus.

   or

   Press the **AUTO FOCUS** button on the remote control to adjust the focus.

Reducing glare

If glare makes it difficult for you to read the printed documents that you're displaying, place the anti-glare sheet on top of the documents.

Optimizing the image

1. Set your document camera to Camera mode.
2. Press the **MENU** button on the control panel or remote control.

   The OSD menu appears.
3. Press the right arrow ▶ button on the control panel or remote control to navigate to the **Image** menu, and then press the ↵ button on the control panel or remote control.
4. Press the down arrow ▼ button on the control panel or remote control to navigate to the **Mode** sub-menu, and then press the ↵ button on the control panel or remote control.
5. Press the right arrow ▶ button on the control panel or remote control to navigate to **Text** mode , and then press the ↵ button on the control panel or remote control.

To optimize the camera for documents with graphics

1. Set your document camera to Camera mode.
2. Press the **MENU** button on the control panel or remote control.

   The OSD menu appears.
3. Press the right arrow ▶ button on the control panel or remote control to navigate to the **Image** menu, and then press the ↵ button on the control panel or remote control.
4. Press the down arrow ▼ button on the control panel or remote control to navigate to the **Mode** sub-menu, and then press the ↵ button on the control panel or remote control.
5. Press the right arrow ▶ button on the control panel or remote control to navigate to **Graphic** mode , and then press the ↵ button on the control panel or remote control.

Using an SD/SDHC card

Your document camera has an SD/SDHC card slot on the right-side connection panel. You can save document camera images to an SD/SDHC card when your document camera is in Camera or Computer Pass-Through mode. When your document camera is in Playback mode you can display previously captured images from an SD/SDHC card.

Caution

Avoid static electricity near a card because it can cause damage.

Important

Your document camera comes with a piece of plastic inserted in the SD/SDHC card slot. Remove this piece of plastic before you insert your SD/SDHC card.

Chapter 4 **Using your document camera in Camera mode**

Using Camera mode 36
Switching to Camera mode 37
Displaying objects 37
Recording a video 37
Using the on-screen display menu in Camera mode 37
Navigating to the OSD menus and sub-menus in Camera mode 38
Accessing the Image menu 38
Accessing the Presentation menu 39
Accessing the Setting menu 41
Accessing the WiFi menu 42
Accessing the System menu 43
Capturing and transferring images and videos 44
Capturing images to memory 44
Recording a video on an SD card 45
Transferring images to your computer 45
Using a microscope 46

This chapter explains how to use your document camera in Camera mode.

Using Camera mode

When your document camera is connected to a projector, interactive display, or TV you can display a full-screen image from your document camera.

You can use your document camera in Camera mode to perform the following tasks:

- Display objects.
- Capture images to an SD/SDHC card.
- Capture images to SMART Notebook software.
- Use the features and settings in the OSD menu.
- Use a microscope with a standard eyepiece and additional adapters.

> **Important**
>
> Your document camera must be connected to a display when using the OSD menu.

Switching to Camera mode

1. Connect your document camera to a projector or flat-panel display with the appropriate cable.
2. Press the **CAMERA/PC** button on the control panel.

   OR

   Press the **CAMERA** button on the remote control.

Displaying objects

1. Press the **CAMERA/PC** button on the control panel.

   OR

   Press the **CAMERA** button on the remote control.
2. Place the object you want to display under the camera.
3. Rotate the camera head to aim the lens at your object.

Recording a video

To record a video

1. Insert an SD/SDHC card or USB drive into the appropriate receptacle.
2. Press the **RECORDING** button on the control panel to start recording.

   OR

   Press the **RECORD** button on the remote control to start recording.

To stop recording a video

Press the **FREEZE/STOP** button on the control panel or remote control to stop recording.

Using the on-screen display menu in Camera mode

Use the OSD menu to adjust settings for your document camera in Camera mode.

The following OSD menu options are available when your document camera is in Camera mode.

Tab	Options
Image	Brightness, Contrast, Mode, Effect, Mirror, Advance, Focus
Presentation	Spotlight, Visor, Split Screen, Picture in Picture (PIP), Timer, Miracast
Setting	Capture, Storage, Format, USB to PC, Flicker, Saturation, Date/Time
WiFi	AP, Dongle Mac ID, Current Status, Machine Name, Use Passcode
System	Language, Output Display, Backup, Save Setting, Recall Setting, Information, Default

Navigating to the OSD menus and sub-menus in Camera mode

1. Set your document camera to Camera mode.
2. Press the **MENU** button on the control panel or remote control.

   The OSD menu appears.
3. Press the left ◀ and right arrow ▶ buttons on the control panel or remote control to toggle between tabs.
4. Press the down ▼ and up arrow ▲ buttons on the control panel or remote control to choose a selection in the menu list.
5. Press the ↵ button on the control panel or remote control to make a selection.
6. Press the ↵ button on the control panel or remote control to enter a sub-menu.
7. Press the ↵ button on the control panel or remote control to return to the previous menu level.
8. Press the **MENU** button on the control panel or remote control to exit the menu.

Accessing the Image menu

1. Set your document camera to Camera mode.
2. Press the **MENU** button on the control panel or remote control.

   The OSD menu appears.

3. Use the right arrow ▶ button on the control panel or remote control to navigate to the **Image** tab.

Image setting options	Description
Brightness	Adjust the image brightness level manually.
Contrast	Adjust the image contrast level manually.
Mode	Select an option from three image display settings: ◦ Text – adjust the contrast to make text appear more visible. ◦ Graphic – adjust the gradient of image. ◦ Microscope – adjust the optical zoom for microscopic view.
Effect	Convert the image to color, black/white, or film negative.
Mirror	Select to flip the image: ◦ ON – displays a mirrored image. ◦ OFF – displays a normal image.

Advanced	Adjust the advanced image settings:
	◦ Auto Image – Select to automatically adjust white balance and exposure, and to correct color and exposure compensation.
	◦ Exposure – Select the exposure settings:
	  ◦ AUTO – automatically adjust the camera exposure.
	  ◦ MANUAL – manually adjust the camera exposure.
	◦ White Balance – Select the White Balance settings for various light conditions:
	  ◦ AUTO – automatically adjust the white balance.
	  ◦ MANUAL – manually adjust the red and blue color levels.

Focus	Adjust the focus manually.

Accessing the Presentation menu

1. Set your document camera to Camera mode.
2. Press the **MENU** button on the control panel or remote control.

   The OSD menu appears.

3. Use the right arrow ▶ button on the control panel or remote control to navigate to the *Presentation* tab.

   For WiFi and Miracast setup instructions see page 22.

Presentation setting options	**Description**

Spotlight	Select to highlight an area on the presentation screen.
	◦ Set and move the overlay frame on the presentation screen.
	◦ Select **Execute** to access the Spotlight sub-menu settings:
	  ◦ ON/OFF – turn the Spotlight on or off.
	  ◦ Shade – adjust the opacity level of the spotlight frame.
	  ◦ Color – select and change the color of the spotlight frame.

Visor	Select to covers the presentation screen. The top part of the presentation screen remains slightly exposed.
	◦ Use the arrow buttons on the control panel or remote control to adjust and move the covered area.
	◦ Select **Execute** to access the Visor sub-menu settings:
	  ◦ ON/OFF – Turn the Visor on or off.
	  ◦ Shade – Adjust the opacity level of the spotlight frame.

Split Screen	Select to divide the screen into two parts. Half of the screen displays eight thumbnail images and the other half displays the image from your document camera. ◦ Select the display location: left, right, top, or bottom. ◦ Select **OFF** to cancel Split Screen.

Presentation setting options	Description
Picture in Picture (PIP)	Select to show captured pictures or videos as thumbnails in the corner of the screen in Camera mode. PIP displays an image from stored memory within the live camera image. ◦ Select the thumbnail playback screen location: lower left, upper left, upper right, lower right. ◦ Select **OFF** to cancel PIP. **Note** The PIP feature is for display only. You can't capture an image while in PIP mode.
Timer	Select to control presentation time management. ◦ Start/Pause/Stop the timer. ◦ Set the timer duration.
Miracast	Select **Setup** and enter device information to connect to Miracast.

Accessing the Setting menu

1. Set your document camera to Camera mode.
2. Press the **MENU** button on the control panel or remote control.

   The OSD menu appears.

3. Press the right arrow ▶ button on the control panel or remote control to navigate to the *Setting* tab.

Setting options	Description
Capture	Select to set the capture resolution, quality, type, and interval settings. ◦ Resolution – select image capture size. In 2 M setting, the capture resolution is 1920 × 1080p. ◦ Quality – select image quality: Finest, High, Normal. ◦ Type – select image capture type: ◦ Single – capture one picture at a time. ◦ Continuous – capture consecutive pictures. ◦ Interval – Set the time interval for continuous capture. The length can be up to 600 sec (10 min).
Storage	◦ Change the storage location. ◦ Audio and video recording can be saved only on an SD/SDHC card.
Format	Delete all the data in the selected memory.
USB to PC	Select the status of your document camera when it's connected to the computer using a USB cable. ◦ Camera – can be used as a computer webcam to record videos or capture images. ◦ Storage – transfer captured images or videos from the memory to a computer hard drive.
Flicker	Select refresh rate: ◦ 50 Hz ◦ 60 Hz
Saturation	Adjust the saturation setting.
Date/Time	Set the time and date.

Accessing the WiFi menu

1. Set your document camera to Camera mode.
2. Press the **MENU** button on the control panel or remote control.

   The OSD menu appears.

3. Press the right arrow ▶ button on the control panel or remote control to navigate to the *WiFi* tab.

WiFi setting options	Description
AP	WiFi connection options: ◦ WiFi Setup – Connect to a network by entering the IP information. ◦ ScanQR – Connect to a network by scanning the QR code. ◦ Advance – Import a certificate and choose whether to set a static IP.
Dongle Mac ID	Displays the connected WiFi dongle Mac ID.
Current Status	Displays the status of the connection mode.
Machine Name	Displays the name of your document camera, which you can select and change.
Use Password	Select to enter a password for your document camera.

Accessing the System menu

1. Set your document camera to Camera mode.
2. Press the **MENU** button on the control panel or remote control.

   The OSD menu appears.
3. Press the right arrow ▶ button on the control panel or remote control to navigate to the *System* tab.

System setting options	Description
Language	Select or change the language.

System setting options	Description
Output Display	◦ Set the resolution to display an image on the screen: ◦ 1024 × 768 ◦ 1280 × 720 ◦ 1280 × 800 ◦ 1280 × 1024 ◦ 1600 × 1200 ◦ 1920 × 1080 ◦ Select TV System to switch between NTSC and PAL video systems. **Note** This selection is disabled in TV output mode.
Backup	Copy images and presentations from the built-in memory to an SD/SDHC card.
Save Setting	Save current settings in the selected profile number. **Note** Only effect, mode, brightness, and contrast settings can be saved.
Recall Setting	Restore the setting to the selected profile number.
Information	Display the product information.
Default	Restore all the settings to the factory default settings.

Capturing and transferring images and videos

You can capture images and videos from your document camera on an SD/SDHC card and transfer them to a computer.

Capturing images to memory

You can capture images and videos from your document camera to an SD/SDHC card when your document camera is in Camera mode.

To capture images to memory

1. Set your document camera to Camera mode (see Page 17).
2. Position your document camera.
3. Adjust the camera settings using the Camera mode's OSD menu (see Page 37).

4. Press the **CAP/DEL** button on the control panel.

   OR

   Press the **CAPTURE** button on the remote control.

Recording a video on an SD card

You can record a video with your document camera and save the recording to an SD card.

To record a video on an SD/SDHC card

1. Insert an SD/SDHC card in your document camera's SD/SDHC card slot.
2. Press the **MENU** button on the control panel or remote control.

   The OSD menu appears.
3. Press the ▶ button on the control panel or remote control to navigate to the Setting tab.
4. Press the ▼ button on the control panel or remote control to navigate to the **Storage**, and then press the ↵ button on the control panel or remote control.

   The document camera detects the SD/SDHC card.
5. Press the **RECORDING** button on the control panel to start recording.

   OR

   Press the **RECORD** button on the remote control to start recording.
6. Press the **RECORDING** button on the control panel to stop recording.

   OR

   Press the **RECORD** button on the remote control to stop recording.

Transferring images to your computer

You can transfer images from your external storage device to your computer.

To transfer images to your computer

1. Use the OSD menu to set your document camera USB to PC mode and select **STORAGE**.
2. Connect your document camera to your computer with the USB cable. See Page 17.

3. Adjust the camera settings using the Camera mode's OSD menu. See Page 37.

> **Note**
>
> Your computer recognizes your document camera and the external storage device as a removal disk.

4. Browse to the removable disk on your computer, and then transfer the images to your computer.

Using a microscope

You can view the microscope stage through the document camera using additional attachments. See *Connecting to external devices* on page 26.

To display a microscope slide

1. Place a slide or object on the stage of the microscope.
2. Focus the microscope so that the subject is sharp.
3. Position the microscope under your document camera so the camera lens is aligned with the microscope eyepiece.

> ⚠ **Caution**
>
> Ensure you do not hit your document camera lens with the microscope. This could damage your document camera's lens.

4. Press the **CAMERA/PC** button on the control panel.

   Or

   Press the **CAMERA** button on the remote control.
5. Press the **MENU** button on the control panel or remote control.

   The OSD menu appears.
6. Press the ▶ button on the control panel or remote control to navigate to the **Image** tab.
7. Press the ▼ button on the control panel or remote control to navigate to the **Mode** sub-menu, and then press the ↵ button on the control panel or remote control.
8. Press the ▼ button on the control panel or remote control to navigate to the **Microscope** mode and then press the ↵ button on the control panel or remote control.

Chapter 5 **Using your document camera in Playback mode**

Setting your document camera to Playback mode 47
Setting your document camera to Playback mode 47
Setting Playback mode using an SD/SDHC card 48
Using the OSD menu in Playback mode 48
Navigating the OSD menu in Playback mode 48
Using Playback mode OSD menu options 49
Selecting the settings for a slide show 49
Playing a slide show 50
Playing a video 50
Deleting images 50

This chapter explains how to use your document camera in Playback mode.

Setting your document camera to Playback mode

When you set your document camera to Playback mode, you can connect to a display or a projector and play back the images or videos from an SD/SDHC card or the internal memory. Browse through the stored images and display captured images individually or as a slide show.

> **Note**
>
> When your document camera is in Playback mode, connect to a display or projector using an HDMI cable and ensure that the images you want to show are stored using an internal or external memory source.

Setting your document camera to Playback mode

While in Playback mode the document camera uses the video output, which disables your ability to access live images and USB functions.

Setting Playback mode using an SD/SDHC card

1. Connect your document camera to a display or projector. See *Connecting to different displays* on page 19.
2. Insert an SD/SDHC card into your document camera. See *Using an SD/SDHC card* on page 35.
3. Press the **PLAYBACK** button on the control panel or remote control.

Using the OSD menu in Playback mode

Use the Playback mode OSD menu to view and select your source storage location and control how the stored images are displayed.

Navigating the OSD menu in Playback mode

To navigate the OSD menu in Playback mode

1. Insert an SD/SDHC card into the document camera.
2. Set your document camera to Playback mode. Press the **PLAYBACK** button on the control panel or remote control.
3. Press the **MENU** button on the control panel or remote control.

   The OSD menu appears.
4. Press the left ◀ and right arrow ▶ buttons on the control panel or remote control to navigate between functions in the menu list.
5. Press the down ▼ and up arrow ▲ buttons on the control panel or remote control to choose a selection in the menu list.
6. Press the ↵ button on the control panel or remote control to make a selection.
7. Press the ↵ button on the control panel or remote control to enter a sub-menu.
8. Press the ↵ button on the control panel or remote control to return to the previous menu level.
9. Press the **MENU** button on the control panel or remote control to exit the menu.

Using Playback mode OSD menu options

The following OSD menu options are available when your document camera is in Playback mode.

Playback menu option	Description
Slide Show	Displays all captured still images in an automated slide show.
Interval	Set the slide show interval before displaying the next image. The maximum interval is 100 seconds.
Effect	Select the slide show transition effect: • Slide image • Checker down • Blinds • Split Vertical Out • Split Horizontal In
Storage	Select the source of the images.
Delete All	Permanently deletes all the data in the selected memory source. **Note** A warning message appears. Select **YES** to continue or **NO** to stop.

Selecting the settings for a slide show

1. Press the **MENU** button on the control panel or remote control to access the Playback mode OSD menu.

2. Press the down arrow ▼ button on the control panel or remote control panel to make a selection, and then press the ↵ button.
3. Press the left ◀ and right arrow ▶ buttons on the control panel or remote control to toggle between functions.
4. Press the ↵ button on the control panel or remote control to toggle between functions.
5. Press the **MENU** button on the control panel or remote control to close the menu.

Playing a slide show

1. Connect your document camera to a projector or display (see Page 19).
2. Insert an SD/SDHC card.
3. Press the **PLAYBACK** button on the control panel or remote control.

   Thumbnail images from the memory source are displayed.
4. Press the **MENU** button on the control panel or remote control.
5. Press the ↵ button on the control panel or remote control twice to start the slide show.
6. Press the **MENU** button on the control panel or remote control to stop the slide show or to return to thumbnail view.

Playing a video

1. Connect your document camera to a projector or display (see Page 19).
2. Insert an SD/SDHC card.
3. Press the **PLAYBACK** button on the control panel or remote control.

   Thumbnail images from the memory source are displayed.
4. Press the left ◀ and right arrow ▶ buttons on the control panel or remote control to toggle between images.
5. Press the ↵ button on the control panel or remote control to select the video you want to play.
6. Press the **MENU** button on the control panel or remote control to stop the video or to return to thumbnail view.

Deleting images

You can delete all images at once from your document camera's memory sources using the OSD menu, or you can delete selected images.

> **Important**
>
> You are unable to delete images from your computer in Playback mode. You can delete images only from the connected memory source.

To delete all images

1. Select the memory source you want to delete all images from.
2. Press the **MENU** button on the control panel or remote control to access the Playback mode OSD menu.
3. Press the down arrow ▼ button the control panel or remote control to navigate to **DELETE ALL**.
4. Press the ↵ button on the control panel or remote control to make a selection.

   The **DELETE ALL** warning appears.
5. Press the left ◀ and right arrow ▶ buttons on the control panel or remote control to select **YES** or **NO**.
6. Press the **MENU** button on the control panel or remote control to **DELETE** or **CANCEL**.
7. Press the **MENU** button on the control panel or remote control to close the Playback mode OSD menu.

To delete one image

1. Press the **PLAYBACK** button on the control panel or remote control to display all the images in the memory storage.
2. Press the right ▶, left ◀, down ▼, or up arrow ▲ buttons on the control panel or remote control to select the image you want to delete.
3. Press the **CAP/DEL** button on the control panel.

   The **DELETE THIS IMAGE** warning appears.

   OR

   Press **DEL** on the remote control.

   The **DELETE THIS IMAGE** warning appears.
4. Press the left ◀ and right arrow ▶ buttons on the control panel or remote control to select **YES** or **NO**.
5. Press the **MENU** button on the control panel or remote control to **DELETE** or **CANCEL**.
6. Press the **MENU** button on the control panel or remote control to close the Playback mode OSD menu.

Chapter 6 **Using your document camera with SMART software**

Connecting your document camera to SMART Notebook software 52
Navigating SMART Notebook's Document Camera Viewer menu options 53
Using a microscope with SMART Notebook software 54
Connecting your document camera to SMART Document Camera software 54
Navigating SMART Document Camera software's Viewer menu options 55

This chapter explains how to use your document camera with SMART Notebook collaborative learning software and SMART Document Camera software.

Using your document camera with SMART Notebook and SMART Document Camera software enables you to display and capture images/videos.

Important

- SMART Notebook software is compatible only through a wired connection.
- Make sure your document camera is set to Camera or Computer Pass-Through mode when using SMART Notebook software.
- SMART Document Camera software is available through a wireless and wired connection.

Connecting your document camera to SMART Notebook software

1. Connect your document camera to your computer using the provided USB cable.
2. Power on the document camera.
3. Launch SMART Notebook software.
4. Select **Insert** from the main menu and then select **SMART Document Camera Viewer**.

   The *SMART Document Camera* window appears.
5. Place the object you want to display under the camera.

Navigating SMART Notebook's Document Camera Viewer menu options

Once the SMART Document Camera Viewer is launched in SMART Notebook, you can easily capture images with the document camera and then adjust them in SMART Notebook's *SMART Document Camera* window.

The following options are available in the *SMART Document Camera* window.

Option	Description
Mixed Reality	**Note** The Mixed Reality feature is only compatible with SMART Document Camera 450 and earlier models.
Capture and close	Insert a screen capture on the current Notebook page and then close the window.
Capture to new page	Capture an image and insert it on a new Notebook page while keeping the current window open.
Capture with time-lapse	Capture a series of screen captures.
Zoom out	Decrease the image magnification.
Zoom in	Increase the image magnification.
Decrease brightness	Decrease the level of brightness when capturing images.
Increase brightness	Increase the level of brightness when capturing images.
Auto focus	Automatically adjust focus.
Focus out	Focus out manually.
Focus in	Focus in manually.
Additional settings	• Start Microscope Mode • Stop Microscope Mode • Rotate 180 degrees • Convert to Color • Convert to Black and White • Convert to Positive • Convert to Negative • Automatically Start Mixed Reality Tools

Using a microscope with SMART Notebook software

1. Connect your document camera to your computer. See *Connecting to external devices* on page 26.
2. Open the *SMART Document Camera* window.
3. Press **Additional Settings** on the *SMART Document Camera* window menu bar, and then select **Start Microscope Mode**.
4. Press **Additional Settings**, and then select **Stop Microscope Mode** when you're done.

Connecting your document camera to SMART Document Camera software

1. Power on the document camera.
2. Launch SMART Document Camera software.
3. Select the **SMART** menu on the top left corner and select **Options**.
4. Navigate to the **Camera Setting** tab.
5. Select **My WirelessCam** from *Choose type of Wireless Camera*.
6. Select the **IP** button.
7. Enter your IP information and select **OK**.

   Important

   Ensure your computer is connected to the same WiFi network (SSID) as the document camera.
8. Select the **OK** button to apply the updates.
9. Place the object you want to display under the camera.

For more information on network recommendations see *Connecting to a wireless network* on page 22.

To connect to SMART Document Camera software using a wired connection

1. Connect your document camera to your computer using the provided USB cable.
2. Power on the document camera.
3. Launch SMART Document Camera software.
4. Place the object you want to display under the camera.

Navigating SMART Document Camera software's Viewer menu options

Once your document camera is connected to SMART Document Camera software you can easily capture and adjust images.

The following options are available in the *SMART Document Camera Viewer* window.

Option	Description

Camera Control	• Pause
	• Auto focus
	• Auto adjust
	• Zoom in
	• Zoom out
	• Zoom reset
	• Rotate right
	• Rotate left
	• Image adjustments
	  ◦ Brightness
	  ◦ Contrast
	  ◦ White balance
	  ◦ Manual focus
	  ◦ Exposure
	  ◦ Straighten image
	  ◦ Color effect
	  ◦ Mode

Option	Description
Annotation	• Select • Freehand • Highlighter • Line • Text • Shape • Eraser • Clear all • Colors • Line style • Undo • Redo
Recording	• Record • Pause • Mute • Slow motion mode
Capture	• Capture • HD capture • Area capture • Continuous capture
Widget Mode	• Camera control • Record • Capture • Camera capture

Chapter 7 **Troubleshooting**

Resolving general issues 58
Resolving image issues 58
Resolving software issues 59
Resolving recording issues 60
Resolving connection issues 60

This chapter provides troubleshooting information for your document camera.

Notes

- These procedures vary depending on your Windows operating system and your system preferences.
- SMART recommends that you update or re-flash the firmware in your document camera to the latest version when there is a new release or if you encounter operational issues, such as lack of Wi-Fi connectivity, difficulty starting, or other issues. For more information, see Updating or re-flashing the SMART Document Camera 550.

Resolving general issues

Issue	Solutions
The presentation screen is dark and unreadable	• Turn on Auto Image in your document camera's OSD menu (**Menu > IMAGE > Advanced > Auto Image**) to adjust the image brightness. • Reset your document camera to its default settings (**Menu > SYSTEM > Default > Yes > Enter**). • Make sure there's enough light in the room, or turn on the overhead light on your document camera. • Adjust the brightness and contrast levels manually in the document camera's OSD menu, or use the buttons on the control panel or remote control. **Note** Ensure the display settings are not adjusted from the default settings. • If you are using a projector, check the bulb.
The SD/SDHC card does not play videos properly.	Format the SD/SDHC card using the document camera's OSD menu (**Menu > SETTING > Format > SD CARD**). ⚠ **Caution** This erases all the data on the SD/SDHC.
Your document camera has an issue not described above.	Restart the document camera using the power button on the control panel or remote control.

Resolving image issues

Issue	Solutions
No camera image displays while in Camera mode.	• Ensure your document camera is turned on. • Check all cable connections. • Check the TV/RGB switch on the right-side connection panel of your document camera and set it to the type of display device you have. • Reset the output resolution by using a pen tip or other small object to press the resolution reset button on the left panel of the document camera.

Issue	Solutions
No computer image displays while in Computer Pass-Through mode.	• Ensure your document camera is turned on. • Ensure the your computer is working by plugging it directly into the display. • Check all cable connections. • Check the cable connections from the computer HDMI output to the HDMI input of your document camera. • Ensure your document camera is in Computer Pass-Through mode. • On some computers, you can press FN+F5 repeatedly to toggle between display modes and the computer images on the presentation screen.
No image appears when you press the PLAYBACK button.	• Insert an SD/SDHC card with stored images or capture an image to the internal memory. • Disconnect the USB cable. **Note** Images need to be stored in the available memory location in order to enter Playback mode.
The image on the presentation screen is distorted or blurry.	• Reset your document camera to its default settings (**Menu > SYSTEMS > Default > Yes**). • Adjust the brightness and contrast manually to reduce the distortion. • Press the auto focus button on the control panel or remote control to adjust the image.

Resolving software issues

Issue	Solutions
SMART Notebook software or SMART Document Camera software doesn't detect your document camera.	• Ensure your USB cable is connected. **Note** If you are not directly connected through a single USB cable, use a shorter direct connection. • Ensure your software is up-to-date. • Ensure the USB cable and the computer USB receptacle are working properly. • Ensure the USB to PC setting is set to **CAMERA** in the document camera's OSD menu.

Resolving recording issues

Issue	Solutions
You're unable to record a video (the red recording light doesn't turn on).	• Ensure the SD/SDHC card is installed. • Disconnect the USB cable (the document camera doesn't record video while being used as a USB camera).
The document camera stops responding during video recording.	Format the SD/SDHC card or USB drive using the document camera's OSD menu (**Menu > SETTING > Format > SD CARD**). **Caution** This erases all the data on the SD/SDHC.

Resolving connection issues

Issue	Solutions
The WiFi connection shows None on the OSD menu.	• Ensure the WiFi dongle is inserted into the document camera. • Ensure the WiFi router is operating. • Rescan for the WiFi signal (**Menu > WiFi > Advanced > Rescan**).
The document camera is connected to my computer but I cannot see the live image in the *SMART Document Camera Viewer* window.	• Ensure the WiFi LED indicator on the document camera control panel is off. • If the WiFi LED indicator is on, press the button on the control panel to turn it off. Then reopen the document camera software.
The SMART Document Camera software detects and displays the IP address but is unable to detect your document camera on the *Options* page.	• Ensure your computer is connected to the same WiFi network (SSID) as the document camera. • If your computer and document camera are not connected to the same network rescan and connect the document camera. (**SMART > Options > Camera Setting > IP**).

Certification and compliance

Federal Communication Commission Interference Statement

This device complies with Part 15 of the FCC Rules. Operation is subject to the following two conditions:

1. This device may not cause harmful interference, and
2. this device must accept any interference received, including interference that may cause undesired operation.

This equipment has been tested and found to comply with the limits for a Class B digital device, pursuant to Part 15 of the FCC Rules. These limits are designed to provide reasonable protection against harmful interference in a residential installation. This equipment generates, uses and can radiate radio frequency energy and, if not installed and used in accordance with the instructions, may cause harmful interference to radio communications.

However, there is no guarantee that interference will not occur in a particular installation. If this equipment does cause harmful interference to radio or television reception, which can be determined by turning the equipment off and on, the user is encouraged to try to correct the interference by one of the following measures:

- Reorient or relocate the receiving antenna.
- Increase the separation between the equipment and receiver.
- Connect the equipment into an outlet on a circuit different from that to which the receiver is connected.
- Consult the dealer or an experience radio/TV technician for help.

⚠ Caution

Any changes or modifications not expressly approved by the party responsible for compliance could void the user's authority to operate this equipment.

This transmitter must not be co-located or operating in conjunction with any other antenna or transmitter.

For operation within 5.15 ~ 5.25GHz / 5.47 ~5.725GHz frequency range, it is restricted to indoor environment. The band from 5600-5650MHz will be disabled by the software during the manufacturing and cannot be changed by the end user. This device meets all the other requirement specified in Part 15E, Section 15.407 of the FCC Rules.

FCC Radiation Exposure Statement:

This product complies with the FCC portable RF exposure limit set forth for an uncontrolled environment and are safe for intended operation as described in this manual. Reduce RF exposure further by keeping the product as far as possible from your body and by setting the device to a lower output power (if available).

Innovation, Science, and Economic Development Canada Statement

This device complies with RSS-210 of the Industry Canada Rules. Operating is subject to the following two conditions:

1. This device may not cause harmful interference, and
2. this device must accept any interference received, including interference that may cause undesired operation.

Ce dispositif est conforme à la norme CNR-210 d'Industrie Canada applicable aux appareils radio exempts de licence. Son fonctionnement est sujet aux deux conditions suivantes:

1. le dispositif ne doit pas produire de brouillage préjudiciable, et
2. ce dispositif doit accepter tout brouillage reçu, y compris un brouillage susceptible de provoquer un fonctionnement indésirable.

⚠ Caution

i. the device for operation in the band 5150-5250 MHz is only for indoor use to reduce the potential for harmful interference to co-channel mobile satellite systems;
ii. the maximum antenna gain permitted for devices in the bands 5250-5350 MHz and 5470-5725 MHz shall comply with the e.i.r.p. limit; and
iii. the maximum antenna gain permitted for devices in the band 5725-5825 MHz shall comply with the e.i.r.p. limits speci"ed for point-to-point and non point-to-point operation as appropriate.
iv. Users should also be advised that high-power radars are allocated as primary users (i.e. priority users) of the bands 5250-5350 MHz and 5650-5850 MHz and that these radars could cause interference and/or damage to LE-LAN devices.

Avertissement:

Le guide d'utilisation des dispositifs pour réseaux locaux doit inclure des instructions précises sur les restrictions susmentionnées, notamment :

i. les dispositifs fonctionnant dans la bande 5 150-5 250 MHz sont réservés uniquement pour une utilisation à l'intérieur a"n de réduire les risques de brouillage préjudiciable aux systèmes de satellites mobiles utilisant les mêmes canaux;
ii. le gain maximal d'antenne permis pour les dispositifs utilisant les bandes 5 250-5 350 MHz et 5 470-5 725 MHz doit se conformer à la limite de p.i.r.e.;
iii. le gain maximal d'antenne permis (pour les dispositifs utilisant la bande 5 725-5 825 MHz) doit se conformer à la limite de p.i.r.e. spéci"ée pour l'exploitation point à point et non point à point, selon le cas.
iv. De plus, les utilisateurs devraient aussi être avisés que les utilisateurs de radars de haute puissance sont désignés utilisateurs principaux (c.-à-d., qu'ils ont la priorité) pour les bandes 5 250-5 350 MHz et 5 650-5 850 MHz et que ces radars pourraient causer du brouillage et/ou des dommages aux dispositifs LAN-EL.

Radiation Exposure Statement:

This product complies with the Canada portable RF exposure limit set forth for an uncontrolled environment and is safe for intended operation as described in this manual. Reducer RF exposure further by keeping the product as far as possible from your body and by setting the device to a lower output power (if available).

Déclaration d'exposition aux radiations:

Le produit est conforme aux limites d'exposition pour les appareils portables RF pour les Etats-Unis et le Canada établies pour un environnement non contrôlé.

Le produit est sûr pour un fonctionnement tel que décrit dans ce manuel. La réduction aux expositions RF peut être augmentée si l'appareil peut être conservé aussi loin que possible du corps de l'utilisateur ou que le dispositif est réglé sur la puissance de sortie la plus faible si une telle fonction est disponible.

EU Declaration of Conformity

Hereby, SMART Technologies ULC declares that the ratio equipment type Wireless AC Dual Band Adapter, DWA-171 is an compliance with Directive 2014/53/EU. The full text of the EU declaration of conformity is available at the following internet address: www.smarttech.com/compliance.

Warning

This equipment is compliant with Class A of CISPR 32. In a residential environment, this equipment may cause radio interference.

The frequency band and the maximum transmitted power in EU are listed below:

Transmitting Band (MHz)	Maximum Transmit Power EIRP (dBm)
2400-2483.5	19.85
5150-5350	19.45
5470-5725	17.44

Restrictions in (5GHz)

AT/BE/BG/CZ/DK/EE/FR/DE/IS/IE/IT/EL/ES/CY/LV/LI/LT/LU/HU/MT/NL/NO/PL/PT/RO/SI/SK/TR/FI/SE/CH/UK/HR.
5150MHz-5350MHz is for indoor use only.

Caution: EXPOSURE TO RADIO FREQUENCY RADIATION

This equipment complies with EU radiation exposure limits set forth for an uncontrolled environment. This equipment should be installed and operated with minimum distance 20 cm between the radiator and your body.

Hardware environmental compliance

SMART Technologies supports global efforts to ensure that electronic equipment is manufactured, sold, and disposed of in a safe and environmentally friendly manner.

Waste Electrical and Electronic Equipment regulations (WEEE and Battery Directive)

Waste electrical and electronic equipment and batteries contain substances that can be harmful to the environment and to human health. Products should be disposed of in the appropriate recycling stream and not as regular waste.

Batteries

The SMART Document Camera 550 contains rechargeable lithium batteries. The remote contains two AAA batteries. Recycle or dispose of batteries properly.

See smarttech.com/compliance for more information.

Hazardous Materials Table

In accordance with the previsions of SJ/T 11364, visit smarttech.com/compliance for this product's hazardous material table.

SMART Technologies

smarttech.com/support

smarttech.com/contactsupport

smarttech.com/kb/171225