SMART Board®
MX | MX Pro
series interactive displays

Installation and maintenance guide

SMART Board MX (V4) series | SMART Board MX Pro (V4) series
SMART Board MX (V3) series | SMART Board MX Pro (V3) series
SMART Board MX (V2-C) series | SMART Board MX Pro (V2-C) series
SMART Board MX (V2) series | SMART Board MX Pro (V2) series
SMART Board MX series
(See page 17 for specific models.)

IDX55-4 | IDX65-4 | IDX75-4 | IDX86-4 | IDX55-3 | IDX65-3 | IDX75-3 | IDX86-3 | IDX55-2 | IDX65-2 | IDX75-2 | IDX86-2 | IDX65-1 | IDX75-1 | IDX86-1

Was this document helpful?
smarttech.com/docfeedback/171555

Learn more

This guide and other resources for SMART Board MX and MX Pro series interactive displays are available in the Support section of the SMART website (smarttech.com/support). Scan this QR code to view these resources on your mobile device.

ENERGY STAR is the government-backed symbol for energy efficiency, providing simple, credible, and unbiased information that consumers and businesses rely on to make well-informed decisions. ENERGY STAR-certified products are the simple choice for energy efficiency, making it easy for consumers and businesses to make purchases that save them money and protect the environment. The U.S. EPA ensures that each product that earns the label is independently certified to deliver the quality, performance, and savings that users have come to expect.

As shipped, your display delivers ENERGY STAR performance and savings. However, changing some settings may increase energy consumption beyond the limits required for ENERGY STAR certification. For example, increased brightness and contrast will increase power consumption.

Please consider the environment when you choose non-ENERGY STAR settings.

License

The terms HDMI, HDMI High-Definition Multimedia Interface, HDMI trade dress and the HDMI Logos are trademarks or registered trademarks of HDMI Licensing Administrator, Inc.

Trademark notice

SMART Board, SMART Notebook, SMART TeamWorks, SMART Meeting Pro, Lumio, Object Awareness, smarttech, the SMART logo and all SMART taglines are trademarks or registered trademarks of SMART Technologies ULC in the U.S. and/or other countries. Android, Chrome, and Google Drive are trademarks of Google Inc. Microsoft, Windows, and OneDrive are either registered trademarks or trademarks of Microsoft Corporation in the United States and/or other countries. Mac, macOS, iOS, and AirPlay are trademarks of Apple Inc., registered in the U.S. and other countries. Intel and Core are trademarks of Intel Corporation in the U.S. and/or other countries. All other third-party product and company names may be trademarks of their respective owners.

Copyright notice

© 2019–2024 SMART Technologies ULC. All rights reserved. No part of this publication may be reproduced, transmitted, transcribed, stored in a retrieval system or translated into any language in any form by any means without the prior written consent of SMART Technologies ULC. Information in this manual is subject to change without notice and does not represent a commitment on the part of SMART.

This product and/or use thereof is covered by one or more of the following U.S. patents:

www.smarttech.com/patents

May 2, 2024

Important information

Important

There are critical software updates for the display that you need to install to ensure the display is fully functional and provides the best experience. Connect the display to a wired or wireless network with Internet access to automatically download and apply these updates as well as future updates.

Warning

- Failure to follow the installation instructions included with the display could result in injury and product damage which may not be covered by the warranty.
- Do not open or disassemble the display. You risk electrical shock from the high voltage inside the casing. Opening the casing also voids the warranty.
- Do not stand (or allow children to stand) on a chair to touch the surface of the display. Rather, mount the product at the appropriate height.
- To reduce the risk of fire or electric shock, do not expose the display to rain or moisture.
- If the display requires replacement parts, make sure the service technician uses replacement parts specified by SMART Technologies or parts with the same characteristics as the original.
- Ensure that any cables that cross the floor to the display are properly bundled and marked to avoid a trip hazard.
- Do not insert objects inside the cabinet ventilation holes, because they could touch dangerous voltage points and cause electric shock, fire, or product damage which may not be covered by the warranty.
- Do not place heavy objects on the power cable. Damage to the cable could cause shock, fire, or product damage which may not be covered by the warranty.
- Use only extension cords and outlets that can fully accommodate the display's polarized plug.
- Use the power cable provided with the display. If a power cable is not supplied, contact your supplier. Use only power cables that match the AC voltage of the power outlet and that comply with your country's safety standards.
- If the glass is broken, do not touch the liquid crystal. To prevent injury, handle glass fragments with care when disposing of them.

- Do not move or mount the display by connecting rope or wire to its handles. The display is heavy, and failure of the rope, wire or handle could lead to injury.
- Use only VESA®-compliant mounts if using a mount other than the one supplied with the display..
- Disconnect all of the display's power cables from the wall outlet and seek assistance from qualified service personnel if any of the following occur:
  - The power cable or plug is damaged
  - Liquid is spilled into the display
  - Objects fall into the display
  - The display is dropped
  - Structural damage, such as cracking, occurs
  - The display behaves unexpectedly when you follow operating instructions
- Before inserting or removing an OPS from the display, turn off the display using the switch at the back of the display. See Open Pluggable Slot computer (OPS) disclaimer for more information.

Caution

- Turn off the display before cleaning its screen. Otherwise, you may scramble the desktop icons or inadvertently activate applications when you wipe the screen.
- Avoid setting up and using the display in an area with excessive levels of dust, humidity, or smoke.
- Make sure an electrical socket is near the display and remains easily accessible during use.
- The display should be used only with European TN and TT power distribution systems.

  It is not suitable for older, IT-type power distribution systems found in some European countries. This system (IT-type) is widely used isolated from earth, in some installations in France, with impedance to earth, at 230/400V, and in Norway, with voltage limiter, neutral not distributed, at 230V line-to-line.

  Contact qualified personnel if you're uncertain of the type of power system available where you're installing the display.
- The accessory slot's maximum available power is 60 W. The slot is not a limited power source. To reduce the risk of fire, make sure that accessories connecting to the slot satisfy the fire enclosure requirements of IEC 62368-1.
- You must connect the USB cable that came with the display to a computer that has a USB compliant interface and that bears the USB logo. In addition, the USB source computer must be compliant with IEC 62368-1. The source computer must be CE marked and carry safety certification marks for Canada and USA. This is for operating safety and to avoid damage to the display.

- This product may contain substances that are candidate SVHCs under the EU REACH Regulation (EC) 1907/2006. Check https://echa.europa.eu/scip-database for the latest information.
- Only SMART-provided OPS appliances are supported in SMART Board interactive displays. Third-party OPS appliances are not supported, and their use can lead to poor performance or damage to the display.
- Do not install or remove the OPS appliance while the display is turned on. First make sure the power switch on the back of the display beside the AC power inlet is in the OFF (O) position. If you can't reach the power switch, use the front control panel's power button ⏻ to put the display in Standby mode, and then unplug the display's power cable from the power outlet.
- After you have turned the display's power switch off or unplugged it, wait at least 30 seconds before removing the appliance to allow its internal power supplies to discharge completely. You might also wait five minutes to give the appliance the opportunity to cool, if necessary.
- Make sure the OPS appliance is secured to the display with screws through the two anchor points. Inadequately secured appliances can damage the display. (An OPS appliance's anchoring screws are typically captive, although some simply include separate anchoring screws.)

Important

- The following are the normal operating power requirements for SMART Board MX (V4) and MX Pro (V4) series models, including speakers:

Model	Power requirements
SBID-MX255-V4, SBID-MX255-V4-VO, SBID-MX255-V4-PW, SBID-MX055-V4, SBID-MX055-V4-PW	100V to 240V AC, 50 Hz to 60 Hz, 88 W
SBID-MX265-V4, SBID-MX265-V4-VO, SBID-MX265-V4-PW, SBID-MX065-V4, SBID-MX065-V4-PW	100V to 240V AC, 50 Hz to 60 Hz, 124 W
SBID-MX275-V4, SBID-MX275-V4-VO, SBID-MX275-V4-PW, SBID-MX075-V4, SBID-MX075-V4-PW	100V to 240V AC, 50 Hz to 60 Hz, 143 W
SBID-MX286-V4, SBID-MX286-V4-VO, SBID-MX286-V4-PW, SBID-MX086-V4, SBID-MX086-V4-PW	100V to 240V AC, 50 Hz to 60 Hz, 178 W

- The following are the normal operating power requirements for SMART Board MX (V3) and MX Pro (V3) series models, including speakers:

Model	Power requirements
SBID-MX255-V3N, SBID-MX255-V3, SBID-MX255-V3N-PW, SBID-MX255-V3-PW, SBID-MX055-V3N, SBID-MX055-V3, SBID-MX055-V3N-PW, SBID-MX055-V3-PW	100V to 240V AC, 50 Hz to 60 Hz, 90 W
SBID-MX265-V3N, SBID-MX265-V3, SBID-MX265-V3N-PW, SBID-MX265-V3-PW, SBID-MX065-V3N, SBID-MX065-V3, SBID-MX065-V3N-PW, SBID-MX065-V3-PW	100V to 240V AC, 50 Hz to 60 Hz, 120 W
SBID-MX275-V3N, SBID-MX275-V3, SBID-MX275-V3N-PW, SBID-MX275-V3-PW, SBID-MX075-V3N, SBID-MX075-V3, SBID-MX075-V3N-PW, SBID-MX075-V3-PW	100V to 240V AC, 50 Hz to 60 Hz, 150 W
SBID-MX286-V3N, SBID-MX286-V3, SBID-MX286-V3N-PW, SBID-MX286-V3-PW, SBID-MX086-V3N, SBID-MX086-V3, SBID-MX086-V3N-PW, SBID-MX086-V3-PW	100V to 240V AC, 50 Hz to 60 Hz, 150 W

- The following are the normal operating power requirements for SMART Board MX (V2-C) and MX Pro (V2-C) Pro series models, including speakers:

Model	Power requirements
SBID-MX255-V2-C, SBID-MX255-V2-CPW	100V to 240V AC, 50 Hz to 60 Hz, 98 W
SBID-MX265-V2-C, SBID-MX265-V2-CPW	100V to 240V AC, 50 Hz to 60 Hz, 119 W
SBID-MX275-V2-C, SBID-MX275-V2-CPW	100V to 240V AC, 50 Hz to 60 Hz, 151 W
SBID-MX286-V2-C, SBID-MX286-V2-CPW	100V to 240V AC, 50 Hz to 60 Hz, 167 W

- The following are the normal operating power requirements for SMART Board MX (V2) and MX Pro (V2) series models, including speakers:

Model	Power requirements
SBID-MX255-V2, SBID-MX255-V2-PW, SBID-MX055-V2, SBID-MX055-V2-PW	100V to 240V AC, 50 Hz to 60 Hz, 98 W
SBID-MX265-V2, SBID-MX265-V2-PW, SBID-MX065-V2, SBID-MX065-V2-PW	100V to 240V AC, 50 Hz to 60 Hz, 103 W
SBID-MX275-V2, SBID-MX275-V2-PW, SBID-MX075-V2, SBID-MX075-V2-PW	100V to 240V AC, 50 Hz to 60 Hz, 151 W

Model	Power requirements
SBID-MX286-V2, SBID-MX286-V2-PW, SBID-MX086-V2, SBID-MX086-V2-PW	100V to 240V AC, 50 Hz to 60 Hz, 167 W

- The following are the normal operating power requirements for SMART Board MX series models, including speakers:

Model	Power requirements
SBID-MX365	100V to 240V AC, 50 Hz to 60 Hz, 115 W max
SBID-MX375	100V to 240V AC, 50 Hz to 60 Hz, 253 W max
SBID-MX386	100V to 240V AC, 50 Hz to 60 Hz, 265 W max
SBID-MX265	100V to 240V AC, 50 Hz to 60 Hz, 106 W max
SBID-MX275	100V to 240V AC, 50 Hz to 60 Hz, 244 W max
SBID-MX286	100V to 240V AC, 50 Hz to 60 Hz, 256 W max

- For additional requirements and other information, refer to the display's specifications (see *More information* on page 19).

Contents

Important information 3

Chapter 1 Welcome 10

- About this guide 10
- About the display's features and components 12
- Identifying your specific model 17
- Accessories 18
- More information 19

Chapter 2 Installing the display 20

- Referring to the deployment checklists 21
- Moving the display to the installation site 21
- Installing the display on a wall 23
- Installing the display on a stand 29
- Installing the iQ appliance and Intel Compute Card 29
- Connecting to a network 30
- Connecting power and turning on the display for the first time 34
- About energy saving modes 37

Chapter 3 Connecting computers and other devices 38

- Installing SMART software 39
- Connecting room computers and guest laptops 39
- Connecting a SMART OPS PC module 47
- Connecting other devices 48
- Connector diagrams 56

Chapter 4 Maintaining the display 66

- Turning off, turning on, and restarting the display 66
- Cleaning and maintaining hardware 68
- Configuring the network for SMART Board MX series models' firmware update 71
- Updating SMART Board MX series models' firmware 72
- Updating iQ system software 73
- Orienting the display 73

Chapter 5 Troubleshooting 75

- Troubleshooting the display and related SMART products 75
- Contacting your reseller for additional support 75

Appendix A Adjusting iQ settings 77
Network settings 77
Personalization 78
Application settings 79
System settings 82
Appendix B Adjusting iQ Pro settings 91
Network settings 91
Application settings 92
System settings 93
Appendix C Adjusting display settings 100
Network 100
Screen lock 101
Advanced 102
Update 103
Recovery 104
About 104
Exiting the display's settings 105
Appendix D Managing SMART Board MX (V2), MX Pro (V2), and later series models using RS-232 106
Configuring the serial interface settings 108
Commands and responses 109
Power state commands 111
Input commands 113
Brightness commands 113
Freeze commands 113
Screen shade commands 114
Volume commands 114
Mute commands 114
Firmware version commands 114
Model number commands 115
Serial number commands 115
Part number commands 115
Asynchronous messages 115
Appendix E Managing SMART Board MX series models using RS-232 117
Configuring the serial interface settings 118
Communication structure 118
Power states 121
Commands 122
Appendix F Enrolling the display in SMART Remote Management 124
Certification and compliance 125

Chapter 1 **Welcome**

About this guide 10
About the display's features and components 12
Touch 12
Writing, drawing, and erasing 12
iQ 13
Display 13
Audio 13
NFC sign in 14
Microphone array 14
Network connectivity 14
Room computers and guest laptops 14
Accessory slot 15
Front control panel 16
Front connector panel 16
Ambient light sensor 16
Power status light 16
Remote control and IR sensor 16
Identifying your specific model 17
Accessories 18
OPS modules 18
Stands 18
USB extenders 18
More information 19

The SMART Board® MX or MX Pro series interactive display is the hub of your classroom or meeting room.

About this guide

This guide explains how to install and maintain a SMART Board MX or MX Pro series interactive display. It includes the following information:

- How to install the display
- How to connect power and devices
- How to turn on the display for the first time and configure the iQ experience

- How to maintain the display for years of use
- How to troubleshoot issues with the display

In addition, this guide includes information about the display's settings and remote management support.

This guide is intended for those who install and maintain displays in their organizations. Other documentation and resources are available for those who use displays (see *More information* on page 19).

Note

This guide covers the following series:

- V4 — SMART Board MX (V4) series
- V3 — SMART Board MX (V3) series
- V2-C — SMART Board MX (V2-C) series
- V2 — SMART Board MX (V2) series
- MX — SMART Board MX series
- V4 Pro — SMART Board MX Pro (V4) series
- V3 Pro — SMART Board MX Pro (V3) series
- V2-C Pro — SMART Board MX Pro (V2-C) series
- V2 Pro — SMART Board MX Pro (V2) series

Information that applies to specific series is marked with the symbols above.

About the display's features and components

The display includes an extensive set of features and components:

Touch

You can do everything on the display that you can do at your computer—open and close applications, meet with others, create new documents or edit existing ones, visit websites, play and manipulate videos, and so on—by touching the display's surface.

You can use an array of gestures within applications, including panning, scaling, rotating, and zooming in and out.

Writing, drawing, and erasing

The display comes with two pens, which you can use to write or draw on the screen.

Use your fist or palm to erase digital ink on the screen.

With Object Awareness™, the display responds automatically to the tool or object you're using, whether it's a pen, finger, or palm. The display's Simultaneous Tool Differentiation technologies allow two people to write independently and simultaneously.

iQ

SMART Board MX (V4) and MX Pro (V4) series models with iQ feature one-touch access to collaborative tools, including a whiteboard, wireless screen sharing, and a web browser. With minimal network integration, there's no need for wires, cables, or manual software and firmware updates.

From the iQ Home screen, you can open the iQ apps, switch inputs, and adjust settings.

Display

The 4K ultra-high-definition LCD display provides optimal image clarity and wide viewing angles.

The size of the display varies by model:

Models	Size (diagonal)
SBID-MX255-V4, SBID-MX255-V4-VO, SBID-MX255-V4-PW, SBID-MX055-V4, SBID-MX055-V4-PW, SBID-MX255-V3N, SBID-MX255-V3, SBID-MX255-V3N-PW, SBID-MX255-V3-PW, SBID-MX055-V3N, SBID-MX055-V3, SBID-MX055-V3N-PW, SBID-MX055-V3-PW, SBID-MX255-V2-C, SBID-MX255-V2-CPW, SBID-MX255-V2, SBID-MX255-V2-PW, SBID-MX055-V2, SBID-MX055-V2-PW	55"
SBID-MX265-V4, SBID-MX265-V4-VO, SBID-MX265-V4-PW, SBID-MX065-V4, SBID-MX065-V4-PW, SBID-MX265-V3N, SBID-MX265-V3, SBID-MX265-V3N-PW, SBID-MX265-V3-PW, SBID-MX065-V3N, SBID-MX065-V3, SBID-MX065-V3N-PW, SBID-MX065-V3-PW, SBID-MX265-V2-C, SBID-MX265-V2-CPW, SBID-MX265-V2, SBID-MX265-V2-PW, SBID-MX065-V2, SBID-MX065-V2-PW, SBID-MX365, SBID-MX265	65"
SBID-MX275-V4, SBID-MX275-V4-VO, SBID-MX275-V4-PW, SBID-MX075-V4, SBID-MX075-V4-PW, SBID-MX275-V3N, SBID-MX275-V3, SBID-MX275-V3N-PW, SBID-MX275-V3-PW, SBID-MX075-V3N, SBID-MX075-V3, SBID-MX075-V3N-PW, SBID-MX075-V3-PW, SBID-MX275-V2-C, SBID-MX275-V2-CPW, SBID-MX275-V2, SBID-MX275-V2-PW, SBID-MX075-V2, SBID-MX075-V2-PW, SBID-MX375, SBID-MX275	75"
SBID-MX286-V4, SBID-MX286-V4-VO, SBID-MX286-V4-PW, SBID-MX086-V4, SBID-MX086-V4-PW, SBID-MX286-V3N, SBID-MX286-V3, SBID-MX286-V3N-PW, SBID-MX286-V3-PW, SBID-MX086-V3N, SBID-MX086-V3, SBID-MX086-V3N-PW, SBID-MX086-V3-PW, SBID-MX286-V2-C, SBID-MX286-V2-CPW, SBID-MX286-V2, SBID-MX286-V2-PW, SBID-MX086-V2, SBID-MX086-V2-PW, SBID-MX386, SBID-MX286	86"

Audio

The display includes two integrated speakers, designed to provide sound at the front of a room.

> **Tip**
>
> You might want to connect an external audio system if you're providing sound in a larger space (see *Connecting an external audio system* on page 53).

NFC sign in

V4 V4 Pro

SMART Board MX (V4) and MX Pro (V4) series models with iQ allow you to sign in to your SMART Account using near field communication (NFC): just hold your SMART ID card to the card reader area on the display's frame and enter a PIN. This feature helps you save time signing in to your account without typing your username and password.

Microphone array

V4 V4 Pro

You can use SMART Board MX (V4) and MX Pro (V4) models' built-in microphone array with a conferencing app. The microphone array provides improved sound detection. You can also use the display's built-in microphone array in place of a connected computer's microphone.

Network connectivity

The display requires a network connection for downloading software and firmware updates, and a number of the iQ apps require a network connection as well.

You can connect to a network using Wi-Fi or the RJ45 LAN jack on the display:

- Wi-Fi supports both 2.4 and 5 GHz bands.
- The two RJ45 jacks allow you to connect the display and an external device, such as a computer, to an Ethernet network.

For more information, see *Connecting to a network* on page 30.

Room computers and guest laptops

You can connect room computers and guest laptops and use the display to view and interact with them.

The display comes with SMART software that you can install on connected computers to take full advantage of the display's features while using the connected computers.

For more information, see *Chapter 3 Connecting computers and other devices* on page 38.

Accessory slot

MX

The iQ appliance is inserted in the accessory slot on the back of the following models:

- SBID-MX365
- SBID-MX375
- SBID-MX386
- SBID-MX265
- SBID-MX275
- SBID-MX286

Note

With the SBID-MX365, SBID-MX375, and SBID-MX386 models, you can insert an Intel® Compute Card in the appliance to provide a complete Windows® 10 installation without the need for an external PC or cables.

V4 V4 Pro V3 V3 Pro V2-C V2-C Pro V2 V2 Pro

For other models, you can install an OPS-compatible device, such as a SMART OPS PC module, in the accessory slot. SMART OPS PC modules provide a complete Windows Pro installation.

See › *Accessories* on page 18

Caution

The accessory slot's maximum available power depends on the display model:

Models	Maximum available power
V4 V4 Pro	100 W
V3 V3 Pro V2-C V2-C Pro V2 V2 Pro MX	60 W

The slot is not a limited power source. To reduce the risk of fire, make sure that accessories connecting to the slot satisfy the fire enclosure requirements of IEC 62368-1.

Front control panel

The front control panel contains buttons for turning the display on and off, controlling the volume, freezing and unfreezing the screen, and showing and hiding a screen shade.

For more information about the front control panel, see the *SMART Board MX and MX Pro series interactive displays user guide* (smarttech.com/kb/171554).

Front connector panel

The front connector panel includes connectors for USB peripherals and a computer or other input.

Ambient light sensor

The ambient light sensor is located in the bottom-right corner of the display's frame.

The ambient light sensor detects the brightness of the room and adjusts the screen's brightness accordingly.

You can enable or disable this feature (see *System settings* on page 82).

Power status light

The power status light is located in the bottom-right corner of the display's frame.

The power status light indicates the display's status.

Power status light	Display status
Red	Standby mode
Green	Normal operating mode

Remote control and IR sensor

You can use the remote control to turn the display on and off, adjust display settings, and so on.

The IR sensor for the remote control is located in the bottom-right corner of the display's frame.

For more information about the remote control, see the *SMART Board MX and MX Pro series interactive displays user guide* (smarttech.com/kb/171554).

Identifying your specific model

There are several models of SMART Board MX and MX Pro series interactive displays:

V4	V4 Pro	V3	V3 Pro	V2-C	V2-C Pro	V2	V2 Pro	MX
SBID-MX255-V4		SBID-MX255-V3N		SBID-MX255-V2-C		SBID-MX255-V2		SBID-MX365
SBID-MX265-V4		SBID-MX255-V3		SBID-MX265-V2-C		SBID-MX265-V2		SBID-MX375
SBID-MX275-V4		SBID-MX265-V3N		SBID-MX275-V2-C		SBID-MX275-V2		SBID-MX386
SBID-MX286-V4		SBID-MX265-V3		SBID-MX286-V2-C		SBID-MX286-V2		SBID-MX265
SBID-MX255-V4-VO		SBID-MX275-V3N		SBID-MX255-V2-CPW		SBID-MX255-V2-PW		SBID-MX275
SBID-MX265-V4-VO		SBID-MX275-V3		SBID-MX265-V2-CPW		SBID-MX265-V2-PW		SBID-MX286
SBID-MX275-V4-VO		SBID-MX286-V3N		SBID-MX275-V2-CPW		SBID-MX275-V2-PW		
SBID-MX286-V4-VO		SBID-MX286-V3		SBID-MX286-V2-CPW		SBID-MX286-V2-PW		
SBID-MX255-V4-PW		SBID-MX255-V3N-PW				SBID-MX055-V2		
SBID-MX265-V4-PW		SBID-MX255-V3-PW				SBID-MX065-V2		
SBID-MX275-V4-PW		SBID-MX265-V3N-PW				SBID-MX075-V2		
SBID-MX286-V4-PW		SBID-MX265-V3-PW				SBID-MX086-V2		
SBID-MX055-V4		SBID-MX275-V3N-PW				SBID-MX055-V2-PW		
SBID-MX065-V4		SBID-MX275-V3-PW				SBID-MX065-V2-PW		
SBID-MX075-V4		SBID-MX286-V3N-PW				SBID-MX075-V2-PW		
SBID-MX086-V4		SBID-MX286-V3-PW				SBID-MX086-V2-PW		
SBID-MX055-V4-PW		SBID-MX055-V3N						
SBID-MX065-V4-PW		SBID-MX055-V3						
SBID-MX075-V4-PW		SBID-MX065-V3N						
SBID-MX086-V4-PW		SBID-MX065-V3						
		SBID-MX075-V3N						
		SBID-MX075-V3						
		SBID-MX086-V3N						
		SBID-MX086-V3						
		SBID-MX055-V3N-PW						
		SBID-MX055-V3-PW						
		SBID-MX065-V3N-PW						
		SBID-MX065-V3-PW						
		SBID-MX075-V3N-PW						
		SBID-MX075-V3-PW						
		SBID-MX086-V3N-PW						
		SBID-MX086-V3-PW						

Tip

For SMART Board MX (V2), MX Pro (V2), or later series models, you can use the label on the display's left side to identify its series. For more information, see *Contacting your reseller for additional support* on page 75.

Accessories

A variety of accessories are available for the display:

- OPS modules
- Stands
- USB extenders

See also › smarttech.com/accessories

OPS modules

The display includes an OPS accessory slot in which your organization can install a SMART OPS module:

- SMART OPS PC
- SMART AM60
- SMART AM30, AM40, or AM50
- SMART AMG1

Alternatively, your organization can install a third-party OPS module if it meets the requirements defined in the display's specifications.

Stands

If you want to move the display from place to place, you can install it on a SMART mobile stand. If you are installing the display on a wall that cannot support the display's full weight, you can install the display on a SMART floor stand.

> **Note**
>
> For users in Australia and New Zealand: SMART does not provide stands for use in Australia and New Zealand, nor can we provide recommendations for stands from other vendors.

USB extenders

As noted in the display's specifications, there is a maximum length for USB cable connections between the display and computer.

Use the USB-XT extender if you need a longer USB connection. See the *USB-XT extender specifications* (smarttech.com/kb/119318).

See also › Extending USB cables

More information

In addition to this guide, SMART provides other documents for the display in the Support section of the SMART website (smarttech.com/support). Scan the QR code on page 2 to view links to SMART Board MX and MX Pro series interactive display documents and other support resources.

Chapter 2 **Installing the display**

Referring to the deployment checklists 21
Moving the display to the installation site 21
Using transportation aides 21
Accommodating doorways, hallways, and elevators 22
Dealing with cracked, chipped, or shattered glass 22
Saving the original packaging 22
Installing the display on a wall 23
Choosing a location 23
Choosing a height 25
Assessing the wall 26
Selecting mounting hardware 26
Selecting a wall mount 26
Mounting the display 27
Installing the display on a stand 29
Using SMART mobile stands 29
Using a third-party stand 29
Installing the iQ appliance and Intel Compute Card 29
Connecting to a network 30
AM50 iQ appliance 33
Connecting power and turning on the display for the first time 34
About energy saving modes 37

SMART recommends that only trained installers install the display.

This chapter is for installers. Installers should read this information along with the installation instructions included with the display before they install the display.

Warning

Improper installation of the display can result in injury and product damage.

Referring to the deployment checklists

Education models only

If you are installing the display as part of an overall SMART education solution, refer to the *Pre-installation checklist for SMART education software and hardware* (docs.smarttech.com/kb/171723) and the *Installation checklist for SMART education software and hardware* (docs.smarttech.com/kb/171724).

Moving the display to the installation site

After your organization receives the display, you need to move it to the place where you plan to install it.

On occasion, you might also need to move the display to another location after installing it initially.

Important

- Move the display at your own risk. SMART cannot accept liability for damages or injury that occur during the display's transportation.
- When moving the display:
  - Follow local safety regulations and standards.
  - Pack the display in its original packaging, including the pallet.
  - Move the display so that its top frame faces up.
  - Do not place an unpacked display on its side.
  - Have at least two people move the display.

Tip

Display packaging may be labeled to indicate which side is the front. Look for "FRONT" on the packaging to help orient the box during transportation.

Using transportation aides

You can use the following aides to move the display:

- Cart
- Furniture dolly
- Mechanical lift

Accommodating doorways, hallways, and elevators

In some situations, you might need to remove the display from its packaging to move it through narrow doorways or hallways or onto an elevator. In these situations, keep the foam pieces on the bottom corners of the display. These foam pieces protect the display if you need to set it down during transportation.

You might also need to rotate the display so that its top frame faces to the side. You can do this during transportation, but when you install the display, it must be in landscape orientation (with the top frame facing up). Do not place an unpacked display on its side.

Dealing with cracked, chipped, or shattered glass

The display contains safety-tempered glass. Although this glass is heat-strengthened to help withstand impacts, the glass can crack, chip, or shatter if struck with enough force. (Safety glass is designed to break into small pieces rather than sharp shards if it is broken.) Temperature changes can cause a minor crack or chip to become worse, possibly causing the glass to shatter.

See › Shattered glass on an interactive display

If the display's glass is cracked or chipped, have it professionally inspected and repaired at a SMART authorized repair center. If the display's glass shatters, carefully clean up the area and have the display repaired or replaced.

Warning

For safety and to prevent further damage, do not continue to install or use the display if its glass is cracked, chipped or shattered.

Saving the original packaging

Save the original packaging, including the display's pallet, and repack the display with as much of it as possible if you ever need to move the display after installation. This packaging was designed to provide the best possible protection against shock and vibration.

Note

If the original packaging isn't available, you can purchase the same packaging directly from your authorized SMART reseller (smarttech.com/where).

Caution

Move the display only in the original packaging or replacement packaging purchased from your authorized SMART reseller. Moving the display without correct packaging can lead to product damage and voids the warranty.

Installing the display on a wall

Typically, you install the display on a wall in a classroom or meeting space.

Choosing a location

A display is typically installed at the room's focal point, such as at the front of a classroom or meeting space.

Selecting an appropriate location is crucial for ensuring the best possible experience with the display. Consider the following factors as you choose a location:

Factor	Considerations
Room setup	• The location allows users, including those in wheelchairs, access to the display. Refer to local regulations regarding accessibility. • The location allows for multiple users to access the display at the same time. • The location accommodates room traffic patterns, and there are no tripping hazards. • The display is not installed where it could be hit by a door or gate. • There are no nearby heating or cooling sources directed at the display, such as a radiator, heat vent, or air conditioner. • There are no nearby shelving units, desks, or other furniture that has doors or drawers that could hit the display. • Furniture, wall decor, and other room features, such as light switches and thermostats, do not block the display and are not blocked by it. (You might be able to move some of these room features to accommodate the display.)

Factor	Considerations

Power and other connections	• The location is close to:
	  ◦ A power outlet
	  ◦ A network outlet (if you plan to use a wired network connection)
	  ◦ A room computer (if you plan to connect a room computer)
	  ◦ External audio systems and other devices that you want to connect to the display
	Notes
	  ◦ If the location is not near a power outlet, consult an electrician for the power setup you need.
	  ◦ Determine if you'll need additional equipment, such as power bars, additional cables, or cable extenders.
	• The location is not where the mains power supply enters the building.

Visibility	The display's screen is clearly visible to all users in the room. SMART recommends users sit within a 178° viewing area: 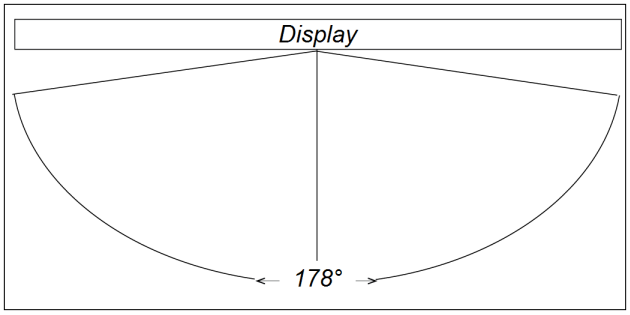 **Note** The viewing area depends on the display's resolution and a variety of other factors. See › Recommended viewing distances and viewing angles for SMART Board interactive displays

Factor	Considerations
Lighting	The location is not near bright light sources, such as windows or strong overhead lighting. Risks of light interference include: ◦ **Reduced visibility:** Light sources can cause glare on the display's screen, reducing its visibility. ◦ **Touch system interference:** Many displays use infrared (IR) light as a key component of the touch system. Strong light that hits the display's screen directly can cause interference with the touch system and prevent the display from working properly. **Tip** To reduce light interference, install blinds or shades on windows or skylights and install switches to dim or turn off any lights that shinedirectly on the display's screen. Keep in mind that sunlight can come through windows at different angles at different times of the year.
Acoustics	The room has good acoustics. See › The room has good acoustics (see Configuring the display for the best audio performance).
Environment and ventilation	• The location meets the environmental requirements in the display's specifications (see *More information* on page 19). • The display isn't subjected to strong vibrations or dust. • Ventilation systems don't blow air directly on the display. • There is adequate ventilation or air conditioning around the display so that heat can flow away from it and the mounting equipment. SMART recommends at least 2" (5 cm) of space on all sides of the display for proper airflow. • If you plan to install the display in a recessed area, there is at least 4" (10 cm) of space between the display and the recessed walls to enable ventilation and cooling.

Choosing a height

Consider the general height of the user community when you choose the height for the display.

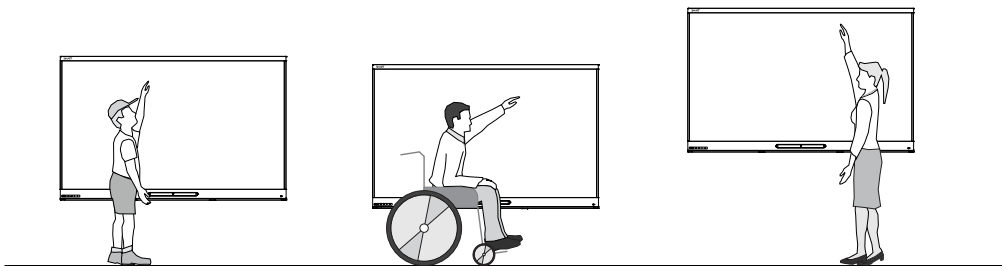

SMART recommends that you mount the display so that its top is 6' 5" (1.9 m) from the floor.

> **Note**
>
> If participants will be sitting at a steep angle (such as in a lecture hall), you may have to adjust the installation height or angle.
>
> See › *Mounting the display* on the next page

Assessing the wall

Be sure the wall you're installing the display on can support the weight of the display and mounting equipment. If it can't, consider using a SMART wall stand to transfer some of the weight from the wall to the floor.

See › smarttech.com/accessories

> **Note**
>
> Refer to the display's specifications for its weight (see *More information* on page 19).

In some situations, you may need to request an engineering analysis to determine if the wall can support the display.

Selecting mounting hardware

The mounting hardware required for installation varies according to the type of wall onto which the display is being mounted.

If you're using the SMART wall mount (WM-SBID-200), see the wall mount's illustrated installation instructions for information about the required mounting hardware (docs.smarttech.com/kb/171373).

Selecting a wall mount

It is always best to mount the display on a wall. If the wall can't support the display's weight, you can use additional hardware to transfer some of the weight to the floor.

Depending on its model, the display may include an attached wall bracket, which you can use to mount the display to the wall:

Models	Attached wall bracket	Illustrated installation instructions
V4 V4 Pro	☐	smarttech.com/kb/171840

Models	Attached wall bracket	Illustrated installation instructions
V3 V3 Pro	☑	smarttech.com/kb/171785
V2-C V2-C Pro V2 V2 Pro	☑	smarttech.com/kb/171547
MX	☑	smarttech.com/kb/171274

Contact your authorized SMART reseller (smarttech.com/where) for information about SMART's mounting options.

If you choose a third-party option rather than one of SMART's mounting options, be sure the wall mount can accommodate the display's dimensions and support the display's weight as well as the weight of any attached accessories.

Mounting the display

Mount the display following the included installation instructions. In addition, consider the following:

The electrical and mechanical components of a display are designed to work properly when the display is mounted in the orientation described in its installation instructions. Mounting the display in a different orientation can cause malfunctions and will void the display's warranty.

There are a number of potential hazards of mounting a display in a non-standard orientation or angle:

- Mounting a display horizontally (like a table top) can cause the glass to sag, damaging the display or interfering with the display's touch system.
- Non-standard orientation can affect ventilation, creating hotpots in equipment, premature failures and, in displays that use projectors, exploding projector bulbs.

- Mount the display vertically (90° relative to the floor plus or minus 2° for tolerance) and in landscape orientation. SMART doesn't support mounting the display at other angles or in portrait orientation.

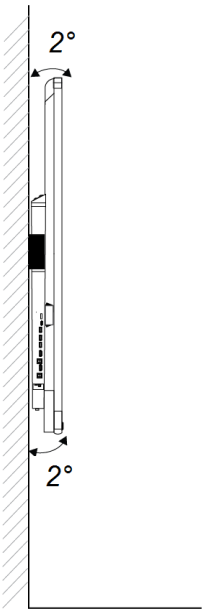

- Use the provided wall mount (if included). Optionally, use a VESA-approved mounting plate that is rated for the display's weight and size.
- If you're not using the included bolts to fasten the wall mount to the display, see the following table.

V4 V4 Pro V3 V3 Pro V2-C V2-C Pro V2 V2 Pro

Display	Bolt type	Minimum length	Maximum length
55" models	M8	14 mm + *x* mm	20 mm + *x* mm
65" models	M8	14 mm + *x* mm	18 mm + *x* mm
75" models	M8	18 mm + *x* mm	30 mm + *x* mm
86" models	M8	14 mm + *x* mm	30 mm + *x* mm

MX

Display	Bolt type	Minimum length	Maximum length
65" models (Part No. 1031028)	M6	14 mm + *x* mm	18 mm + *x* mm
65" models (Part No. 1033445)	M8	14 mm + *x* mm	18 mm + *x* mm
75" models	M8	18 mm + *x* mm	30 mm + *x* mm
86" models	M8	14 mm + *x* mm	30 mm + *x* mm

where *x* is the combined thickness of the wall mount and washer

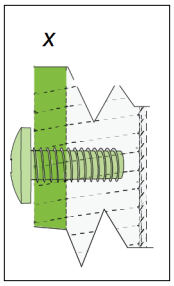

- Fasten force: 97.36–177.01 in-lb. (11–20 N·m)

> ⚠ **Caution**
>
> Do not over-tighten the bolts.

Installing the display on a stand

You can install the display on a stand if you want to move the display from place to place or if it's not possible to install the display on a wall.

> **Note**
>
> For users in Australia and New Zealand: SMART does not provide stands for use in Australia and New Zealand, nor can we provide recommendations for stands from other vendors.

Using SMART mobile stands

SMART mobile stands are designed for SMART Board interactive displays. Some are height-adjustable. Some models include a locking cabinet to secure equipment and casters that swivel and lock for easy movement.

See also › smarttech.com/accessories

Using a third-party stand

For information about selecting and using a third-party stand, see Installing the display on a stand.

Installing the iQ appliance and Intel Compute Card

MX

For more information about installing the iQ appliance in SMART Board MX series displays, see the *SMART Board MX series interactive display installation instructions* (smarttech.com/kb/171274).

Caution

Install the AM50 iQ appliance and Intel Compute Card before you turn on the display for the first time.

Important

If you're using an AM50 iQ appliance, make sure the display's firmware version is 1.8.7 or later. The display may not function properly if the display's firmware version is older. See *Updating SMART Board MX series models' firmware* on page 72.

With the SBID-MX365, SBID-MX375, and SBID-MX386 models, you can insert an Intel Compute Card in the slot on the AM50 iQ appliance to access the card's Windows 10 operating system from the display.

Important

Make sure the Intel Compute Card is inserted before you turn on the display.

Note

By default, the HDMI output extends the Windows desktop, and this can cause display problems in certain configurations. If you experience issues, set the HDMI out to a mirrored desktop rather than the default extended desktop. Right click, select Display settings, and set the secondary display to mirror the first.

Tip

You can connect peripherals, such as a keyboard or mouse, to the Intel Compute Card using the USB receptacles on the iQ appliance.

Connecting to a network

Before connecting the display, your organization's network administrators need to configure the network to allow users to update the display's firmware automatically and to use all the iQ features.

See › support.smarttech.com/docs/iq4networksetup

See › support.smarttech.com/docs/iq3networksetup

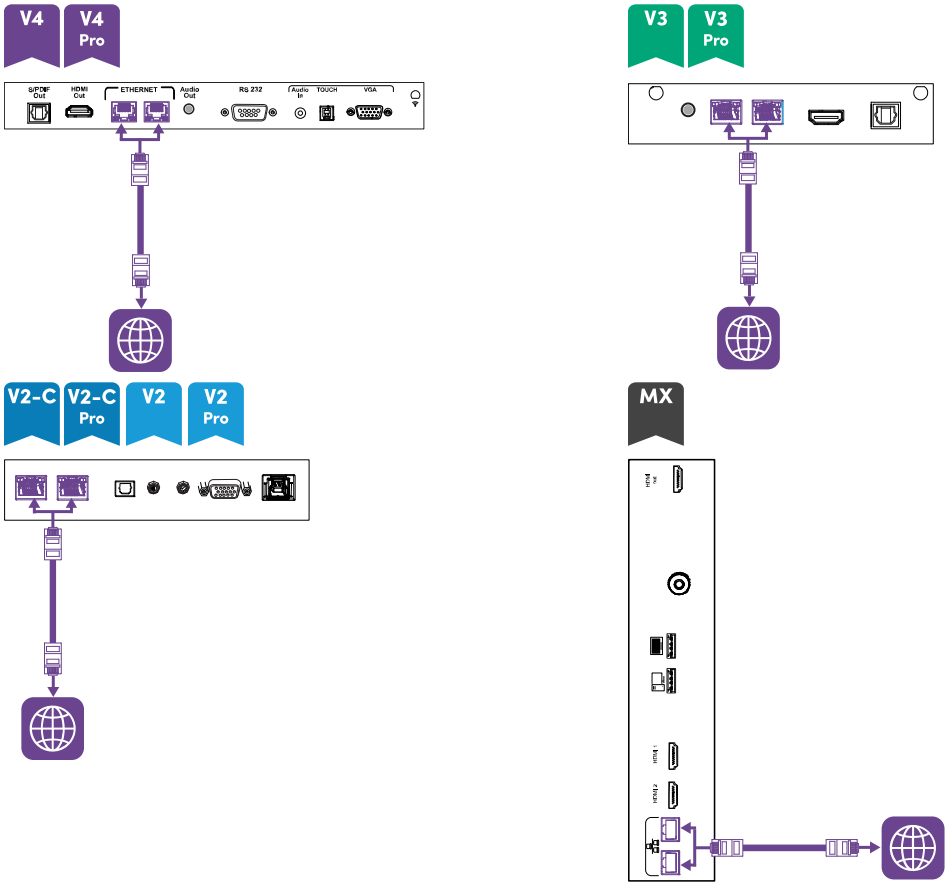

The display requires an internet connection for downloading software and firmware updates, and a number of the iQ apps require a network connection as well. You can connect to the network with Wi-Fi or with an Ethernet cable attached to one of the RJ45 jacks.

Tip

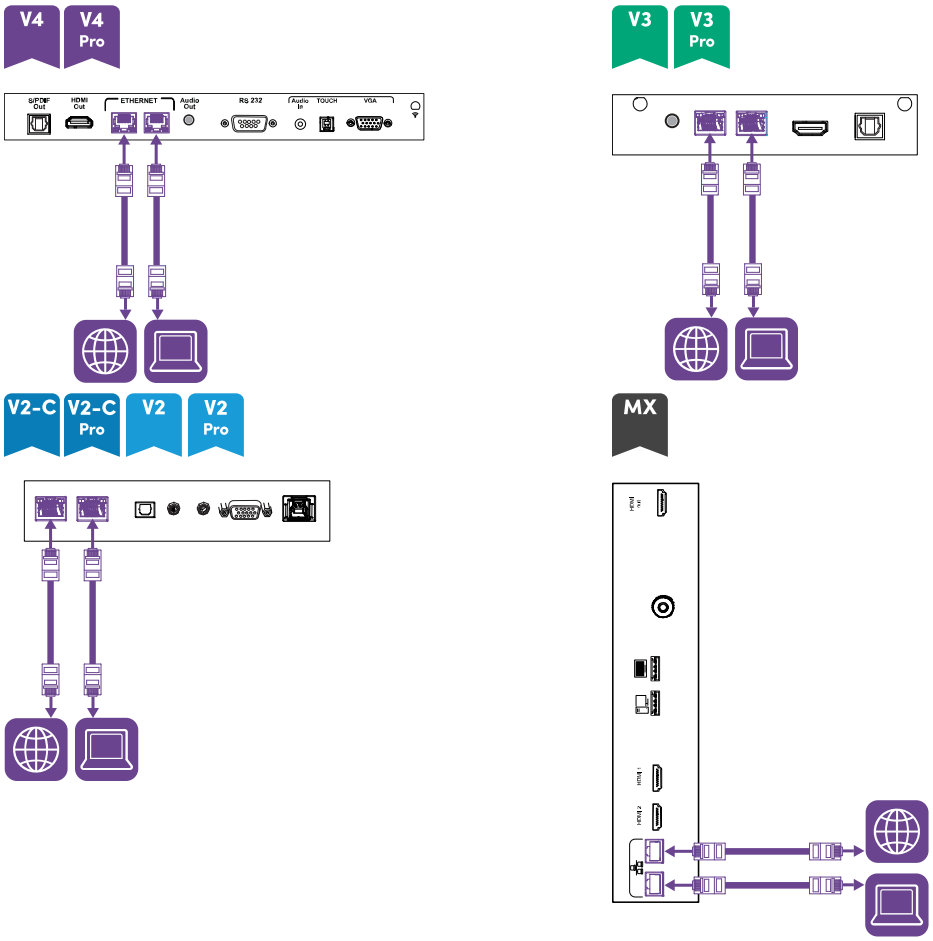

If you're using one of the display's RJ45 jacks to connect to a network, you can connect a computer to the other RJ45 jack to provide network access for the computer. This is particularly useful if only one wired network connection is available in the room. Network access is available when Networked Standby is enabled in Settings but not when Standby is enabled.

AM50 iQ appliance

MX

There are three ways to connect the AM50 appliance included with the SBID-MX365, SBID-MX375, and SBID-MX386 models to a network:

- Connect using Wi-Fi
- Connect an Ethernet cable from a network outlet directly to the AM50 appliance's RJ45 jack

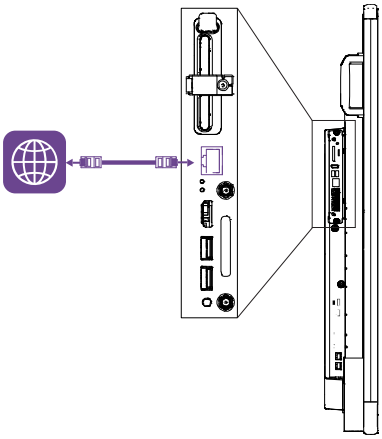

- Connect an Ethernet cable from a network outlet to one of the display's RJ45 jacks, and then connect another Ethernet cable from the display's other RJ45 jack to the AM50 appliance's RJ45 jack

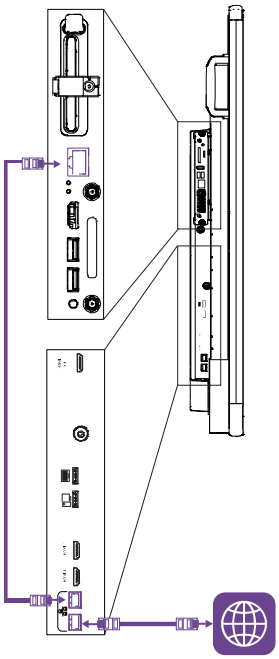

Connecting power and turning on the display for the first time

The final step in installing and configuring the display is to connect power and turn it on. When you first turn on the display, a setup wizard appears. Follow the steps in the wizard to complete the setup.

To connect the display to power

Connect the supplied power cable from the AC power inlet on the back of the display to a power outlet.

55" and 65" models

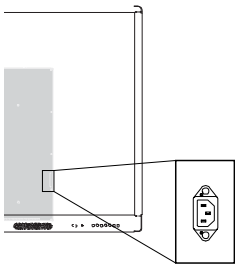

75" models

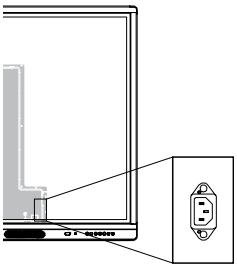

86" models

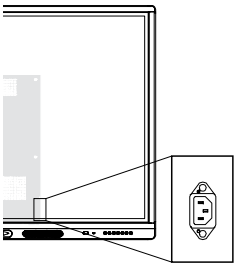

> **Note**
>
> Refer to the display's specifications for power requirements and power consumption information (see *More information* on page 19).

To turn on and set up the display for the first time

> **Caution**
>
> - Install the OPS appliance before you turn on the display. If you can't reach the power switch, use the front control panel's power button ⏻ to put the display in Standby mode, and then unplug the display's power cable from the power outlet.
> - Make sure the OPS appliance is secured to the display with screws through the two anchor points. Inadequately secured appliances can damage the display. (An OPS appliance's anchoring screws are typically captive, although some simply include separate anchoring screws. Third-party OPS appliances are not supported, and their use can lead to poor performance or damage to the display.

> **Important**
>
> Install the OPS PC module before you turn the display on.

Notes

- Touch is not available immediately after waking or turning on the display. Wait a few seconds, and then the display will respond to touch.
- If a USB drive is connected to the display's service port receptacle, do not remove the USB drive. The USB drive may contain an important firmware update.

1. Flick the switch beside the AC power inlet to the ON (I) position.

V4 V4 Pro

55" models

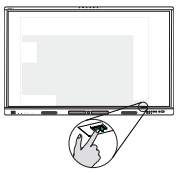

65" models

75" and 86" models

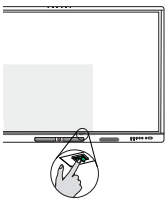

V3 V3 Pro V2-C V2-C Pro V2 V2 Pro

55" models

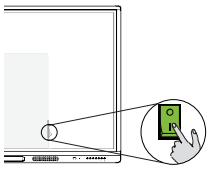

65" models

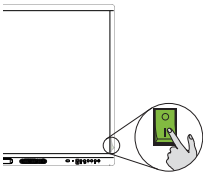

75" and 86" models

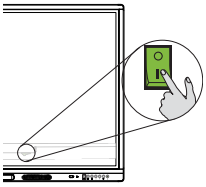

MX

65" models

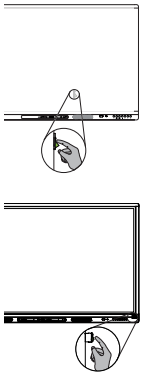

75" models

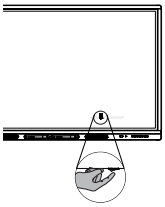

86" models

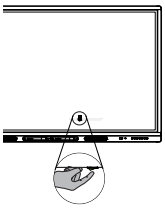

2. Press the **Power** button ⏻ on the front control panel or remote control.
3. Select your preferred language, and then tap **Next**.
4. Select your country, and then tap **Next**.
5. Select your time zone, and then tap **Next**.
6. Set the date, and then tap **Next**.
7. Set the time, and then tap **Next**.
8. Name the display, and then tap **Next**.
9. If the display isn't using a wired network connection, select a wireless network, and then tap **Next**.

   Important

   The display needs an internet connection for downloading and installing important updates. Ask the network administrator to confirm that the network has been correctly configured for iQ. For more information about network configuration, see Configuring your organization's network for a SMART Board display with iQ.

10. Select the apps you want to appear in the Apps Library, and then tap **Next**.

    Tip

    To change which apps appear in the Apps Library, see *Application settings* on page 79.

11. Tap **Finish**.

    The *Welcome* screen appears.

    OR

    The display downloads and applies updates for the firmware and system software.

About energy saving modes

The display features a number of energy saving modes:

Mode	Description
Networked standby (sleep)	A low power state in which the display quickly turns on when the Power button ⏻ is pressed. In this state, the display also turns on when it receives a Wake on LAN command from a network.
Standby (shutdown)	A very low power state in which the display turns on when the Power button ⏻ is pressed.

Standby is the default energy saving mode for displays set to a location within the EU. Elsewhere, networked standby is the default energy saving mode. You can select the display's energy saving mode in **Settings > System Settings > Power > Energy Saver**.

Chapter 3 **Connecting computers and other devices**

Installing SMART software 39
Connecting room computers and guest laptops 39
- Viewing a connected computer's input 45
- Setting a connected computer's resolution and refresh rate 46

Connecting a SMART OPS PC module 47
Connecting other devices 48
- Connecting USB drives, peripherals, and other devices 48
- Installing a Micro-SD card 50
- Connecting an external display 53
- Connecting an external audio system 53
- Connecting room control systems 55

Connector diagrams 56
- SMART Board MX (V4) and MX Pro (V4) series 56
  - Side and bottom connector panels 56
  - Front connector panel 58
- SMART Board MX (V3) and MX Pro (V3) series 59
  - Side and bottom connector panels 59
  - Front connector panel 60
- SMART Board MX (V2-C and V2) and MX Pro (V2-C and V2) series 61
  - Side and bottom connector panels 61
  - Front connector panel 62
- SMART Board MX series 63
  - Side and bottom connector panels 63
  - Front connector panel 64
- AM40 and AM50 appliances 65

Warning

Ensure that any cables that cross the floor to the display are properly bundled and marked to avoid a trip hazard.

Installing SMART software

The display comes with SMART software that you can install on connected room computers and guest laptops. Other SMART software is optional.

Software type	SMART Board MX models	SMART Board MX Pro models
Included	SMART Notebook SMART Product Drivers and Ink **SMART Remote Management** SMART Remote Management[1]	SMART Meeting Pro SMART Product Drivers and Ink **SMART Remote Management** SMART Remote Management[1]
Optional	Lumio by SMART SMART Notebook Plus	SMART TeamWorks Room

See › smarttech.com/downloads

Connecting room computers and guest laptops

You can connect cables for room computers and guest laptops. By installing cables in advance, you make use of connectors that might not be accessible after the display is wall-mounted. You can then run the cables across floors or behind walls as needed.

[1]Subscription for the length of the warranty

V4 V4 Pro

Side and bottom connector panels

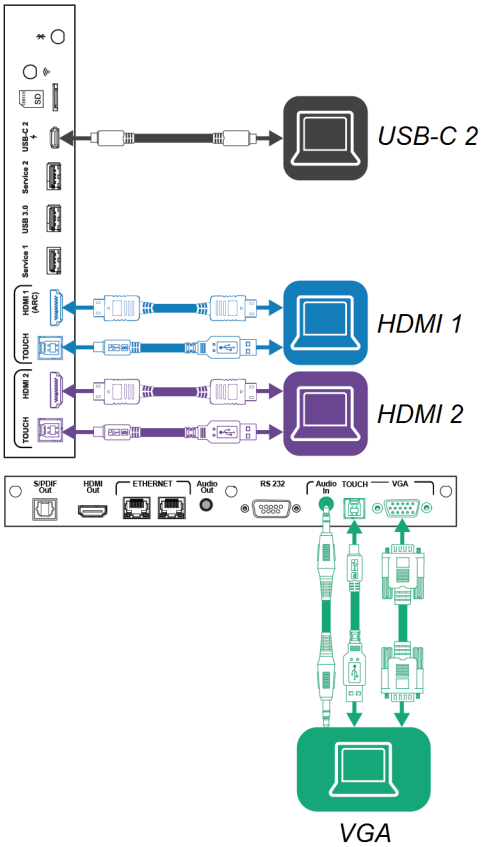

Front connector panel

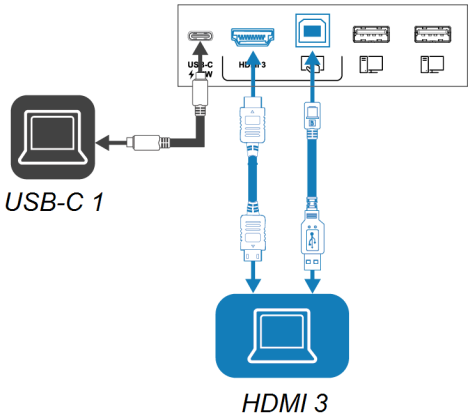

Note

Not all SMART Board MX (V4) series models include connectors for the VGA input.

V3 V3 Pro

Side and bottom connector panels

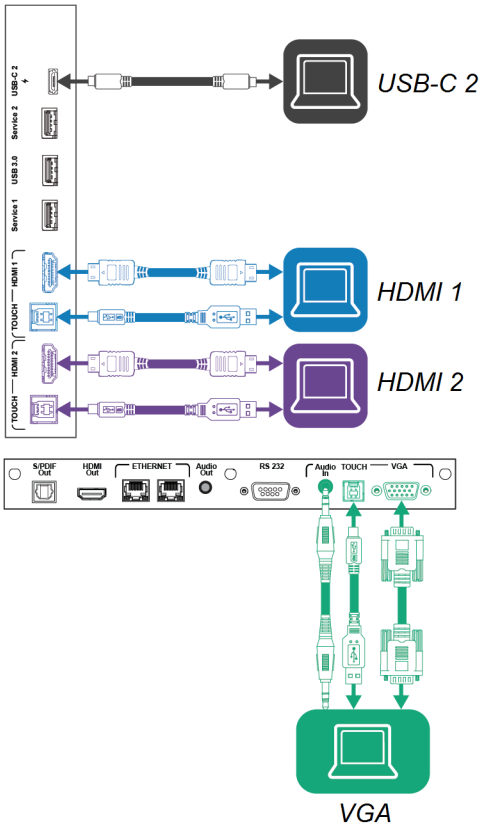

Front connector panel

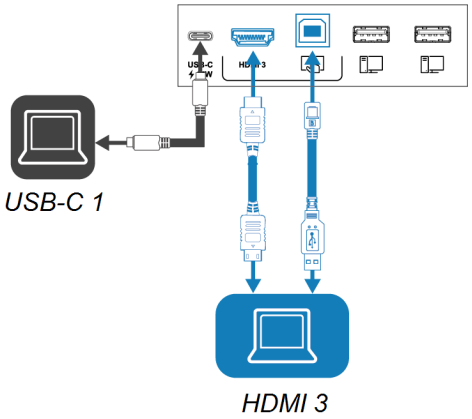

V2-C V2-C Pro

Side and bottom connector panels

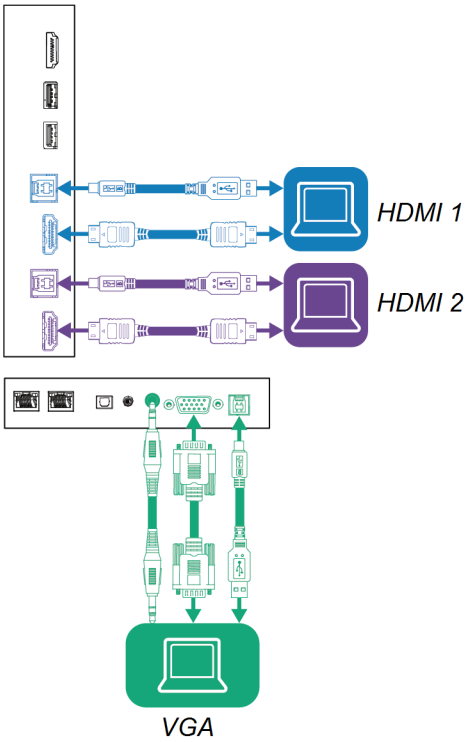

Front connector panel

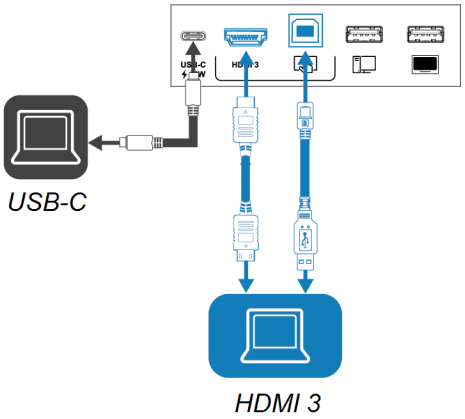

V2 V2 Pro

Side and bottom connector panels

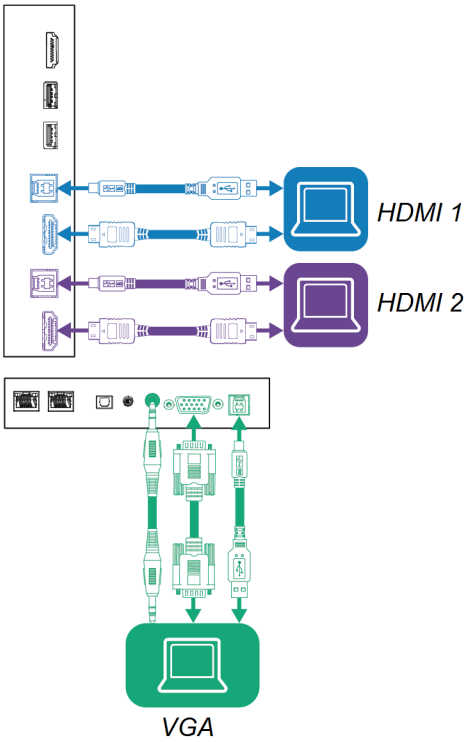

Front connector panel

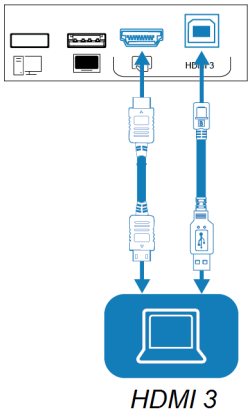

MX

Side and bottom connector panels

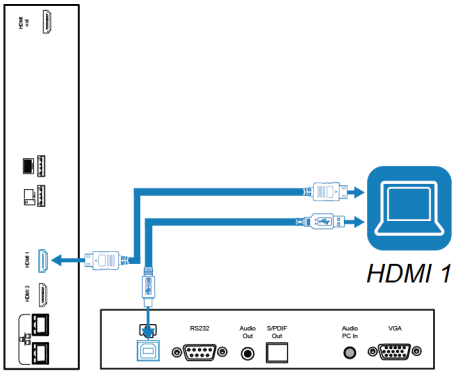

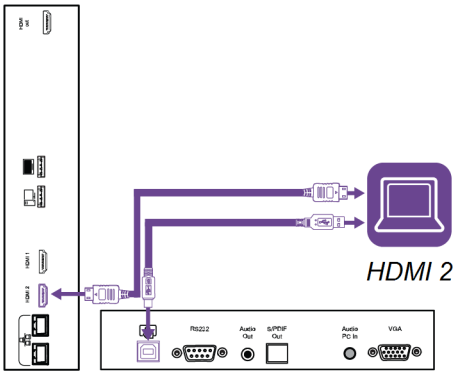

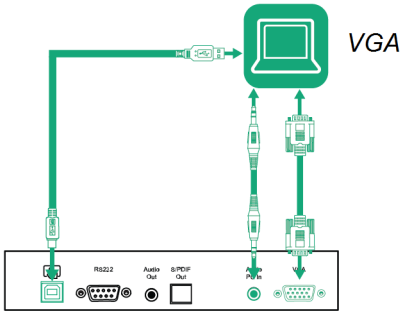

Front connector panel

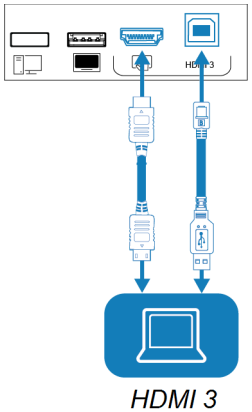

Notes

- Install SMART software on any computers you connect to the display (see *Installing SMART software* on page 39).

- You can charge devices using the display's USB Type-C receptacles:

Models	USB Type-C receptacle location	Maximum charging capacity
V4 V4 Pro V3 V3 Pro V2-C V2-C Pro	Front connector panel	15 W
V4 V4 Pro V3 V3 Pro	Side connector panel (when a module is not installed in the accessory slot)	65 W
V4 V4 Pro V3 V3 Pro	Side connector panel (when a module is installed in the accessory slot)	30 W

- If a connected computer reports "Too many USB hubs" or "cannot start (code 10)," see the knowledge base article, SMART Board interactive displays and USB tier structure use.

Viewing a connected computer's input

V4 V4 Pro V3 V3 Pro V2-C V2-C Pro V2 V2 Pro

1. Connect the computer to the display.
2. View the available inputs in one of the following ways:
   - If iQ is enabled, tap **Input** on the Home screen.

     OR

     If iQ is disabled, press the **Home** button (or).
   - Press **Input** on the front control panel.
   - Press **Input** on the remote control.

   The display shows thumbnails of the devices that are connected to the display's inputs:
   - A gray thumbnail indicates no device is connected to an input.
   - A black thumbnail indicates a device is connected to an input but is in Standby mode.
   - A thumbnail showing a preview screen indicates an active device is connected to an input.
   - A thumbnail with **Touch enabled** indicates a USB cable is connected between the display and device and touch is available.
3. Tap the computer's thumbnail.

MX

1. Connect the computer to the display.
2. Press the **Input** on the front control panel.

   The Input selection menu appears.

   > **Note**
   >
   > Inputs with connected devices are blue, and inputs without a connection are black.

3. Tap the computer's input menu option.

Setting a connected computer's resolution and refresh rate

This table presents the recommend resolutions and refresh rates for the display's USB-C and HDMI inputs:

Resolution	Input aspect ratio	Mode	Refresh rate
3840 × 2160	16:9	UHD / 2160p	59.94 Hz / 60 Hz 50 Hz 29.97 Hz / 30 Hz 25 Hz 23.98 Hz / 24 Hz
1920 × 1080	16:9	FHD / 1080p	59.94 Hz / 60 Hz 50 Hz 29.97 Hz / 30 Hz 25 Hz 23.98 Hz / 24 Hz
1360 × 768	16:9	HD	60.015 Hz
1366 × 768	16:9	HD	60.015 Hz
1280 × 720	16:9	HD / 720p	59.94 Hz / 60 Hz 50 Hz 29.97 Hz / 30 Hz 25 Hz 23.98 Hz / 24 Hz
720 × 480	16:9	480p (DVD Player)	60 Hz

This table presents the recommend resolutions and refresh rates for the display's VGA input:

Resolution	Input aspect ratio	Mode	Refresh rate
1920 × 1080	16:9	[N/A]	60.000 Hz
1600 × 1200	4:3	[N/A]	60.000 Hz
1360 × 768	16:9	[N/A]	60.015 Hz
1280 × 1024	5:4	SXGA 60	60.020 Hz
1024 × 768	4:3	XGA 60 XGA 70 XGA 75	60.004 Hz 70.069 Hz 75.029 Hz
800 × 600	4:3	SVGA 60 SVGA 72 SVGA 75	60.317 Hz 72.188 Hz 75.000 Hz
640 × 480	4:3	VGA 60	59.940 Hz

If possible, set connected computers to these resolutions and refresh rates. See the connected computers' operating system documentation for instructions.

Connecting a SMART OPS PC module

If your organization has purchased a SMART OPS PC module, you or your organization's installers can install the module in the display's accessory slot following the OPS PC module's installation instructions (docs.smarttech.com/kb/171775 or docs.smarttech.com/kb/171544). You can then view the OPS PC module's input on the display.

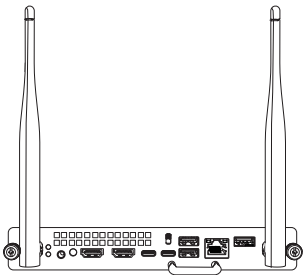

See › *SMART OPS PC modules user guide* (docs.smarttech.com/kb/171747)

Caution

- Only SMART-provided OPS appliances are supported in SMART Board interactive displays. Third-party OPS appliances are not supported, and their use can lead to poor performance or damage to the display.
- Do not install or remove the OPS appliance while the display is turned on. First make sure the power switch on the back of the display beside the AC power inlet is in the OFF (O) position. If you can't reach the power switch, use the front control panel's power button ⏻ to put the display in Standby mode, and then unplug the display's power cable from the power outlet.

- After you have turned the display's power switch off or unplugged it, wait at least 30 seconds before removing the appliance to allow its internal power supplies to discharge completely. You might also wait five minutes to give the appliance the opportunity to cool, if necessary.
- Make sure the OPS appliance is secured to the display with screws through the two anchor points. Inadequately secured appliances can damage the display. (An OPS appliance's anchoring screws are typically captive, although some simply include separate anchoring screws.)

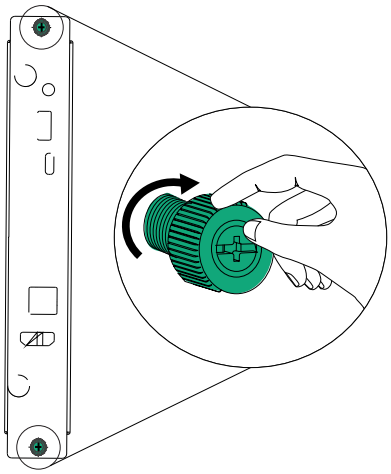

Connecting other devices

In addition to computers, you can connect a variety of other devices to the display:

- USB drives, peripherals, and other devices
- External displays
- External audio systems
- Room control systems

Connecting USB drives, peripherals, and other devices

The display includes the following USB receptacles. You can connect USB drives, peripherals (such as keyboards), and other devices to these receptacles and use the devices with iQ, connected computers, and devices installed in the accessory slot (such as the SMART OPS PC module).

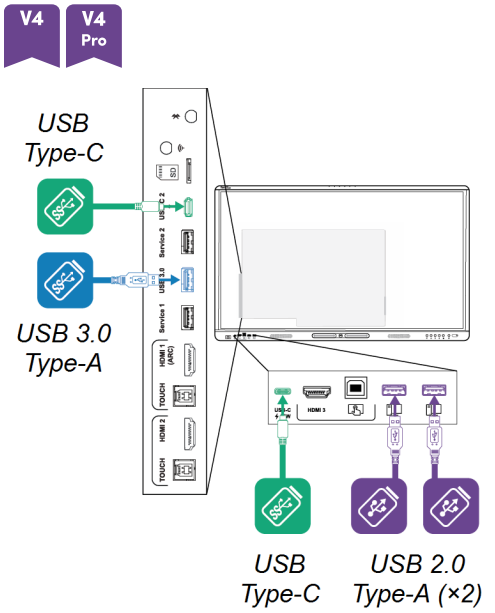
V4
V4 Pro
USB Type-C
USB 3.0 Type-A
USB Type-C
USB 2.0 Type-A (×2)

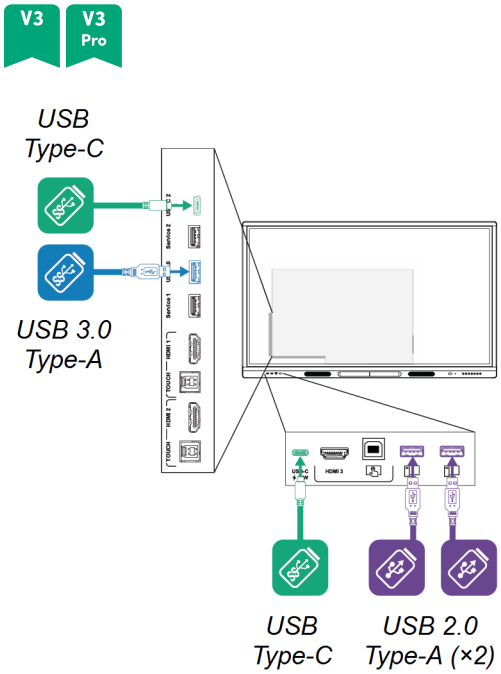
V3
V3 Pro
USB Type-C
USB 3.0 Type-A
USB Type-C
USB 2.0 Type-A (×2)

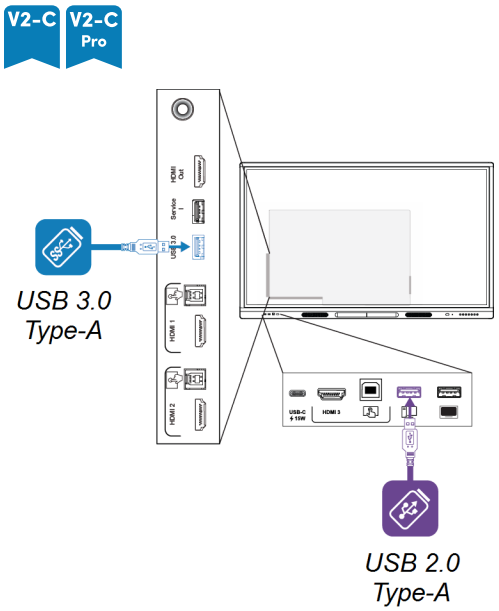
V2-C
V2-C Pro
USB 3.0 Type-A
USB 2.0 Type-A

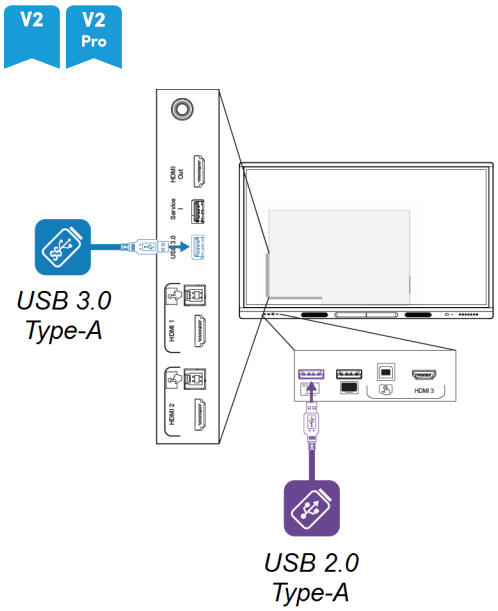
V2
V2 Pro
USB 3.0 Type-A
USB 2.0 Type-A

MX

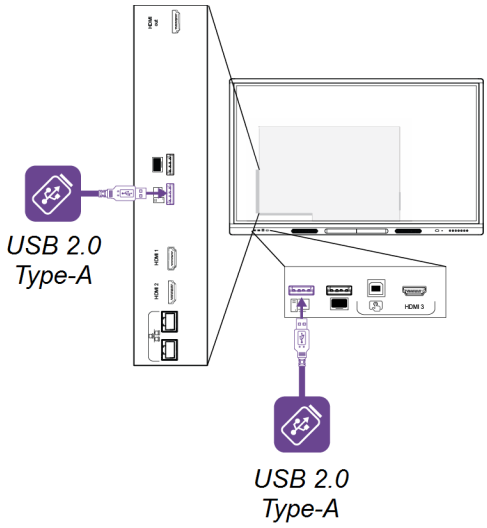

This table shows the supported USB speeds for each input:

Input	USB 2.0 Type-A	USB 3.0 Type-A	USB Type-C
iQ	Hi-Speed	SuperSpeed	SuperSpeed
USB-C 1	Hi-Speed	Hi-Speed	Hi-Speed
USB-C 2	Hi-Speed	Hi-Speed	Hi-Speed
HDMI 1	Hi-Speed	SuperSpeed	SuperSpeed
HDMI 2	Hi-Speed	SuperSpeed	SuperSpeed
HDMI 3	Hi-Speed	SuperSpeed	SuperSpeed
VGA	Hi-Speed	SuperSpeed	SuperSpeed
Accessory slot	Hi-Speed	SuperSpeed	SuperSpeed

Installing a Micro-SD card

V4 V4 Pro V3 V3 Pro

Use a Micro-SD card to increase the display's internal storage capacity. The Micro-SD card's storage is combined with the internal storage of the display so you can save additional files, media, and apps on the display.

> **Important**
>
> Displays must have iQ system software 3.14 or later installed to use this feature.

SMART recommends a name brand Micro–SD card that has the following specifications:

- SDHC or SDXC flash memory
- Up to 80MB/s transfer speed
- U1 or higher UHS speed class
- C10 or higher video speed class
- Single partition

To increase the display's storage capacity

1. Insert an unformatted Micro-SD card into the SD card slot on the display.

   The display detects the inserted SD card, formats it automatically, and makes it available as part of the display's internal storage capacity.

   > **Note**
   >
   > The display might have a label covering the SD card slot. Remove this label to access the slot.
   >
   >
   >

2. Verify that the SD card was successfully added by navigating to **Settings** > **About** > **Internal Storage**. The internal storage displays the added amount from the SD card.

   > **Example**
   >
   > 64GB (32GB internal + 32GB SD card)

3. Keep the SD card inserted in the display.

> **Note**
>
> If the SD card is removed, the display might not turn on or there may be lost data, including files and apps. To recover, reinsert the SD card or perform a factory reset.

Connecting an external display

V4 V4 Pro V3 V3 Pro V2-C V2-C Pro V2 V2 Pro

You can connect an external display to models that have an HDMI 2.0 out connector on the connector panel. The external display will show the same image. This is useful when you're using the display in an auditorium or other large space where it would be beneficial to have a second display.

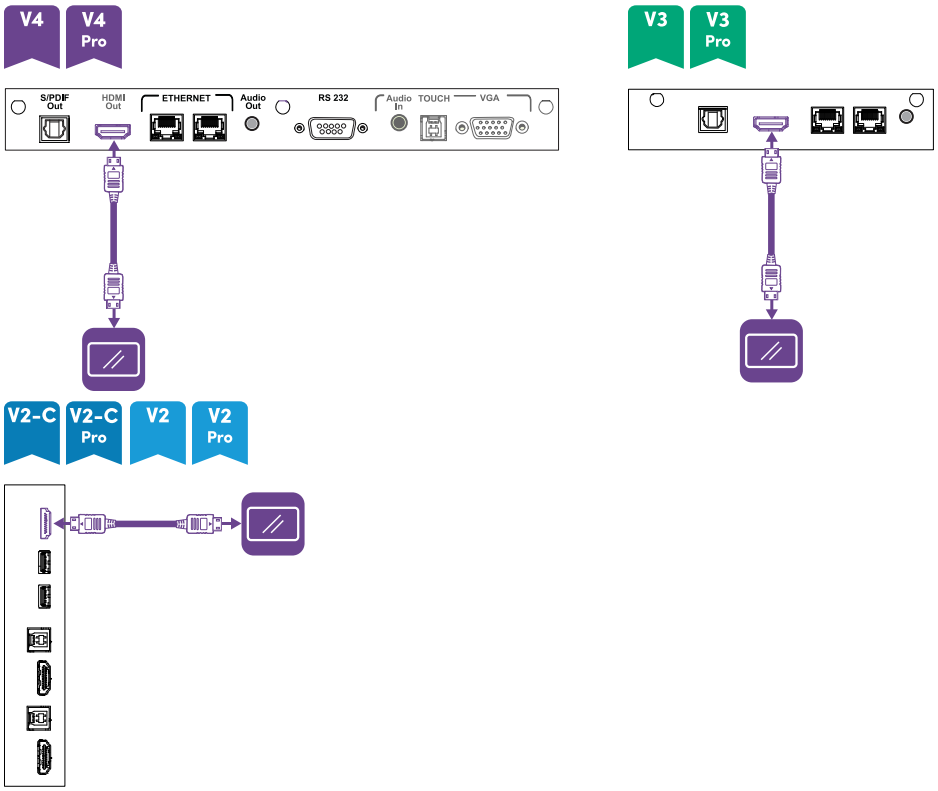

Note

Not all SMART Board MX (V4) models and SMART Board MX (V3N) models include an HDMI Out connector.

Important

If the connected external display doesn't support HDCP, the image on the external display is limited to 480p resolution. For full resolution output, connect a display that supports HDCP.

Connecting an external audio system

The display includes two speakers, which are designed to provide sound at the front of a room. You might want to connect an external audio system if you're providing sound in a larger space.

You can connect the display to an external audio system using the stereo 3.5 mm out connector. This disables the display's internal speakers. Alternatively, you can connect an external audio system directly to a room computer.

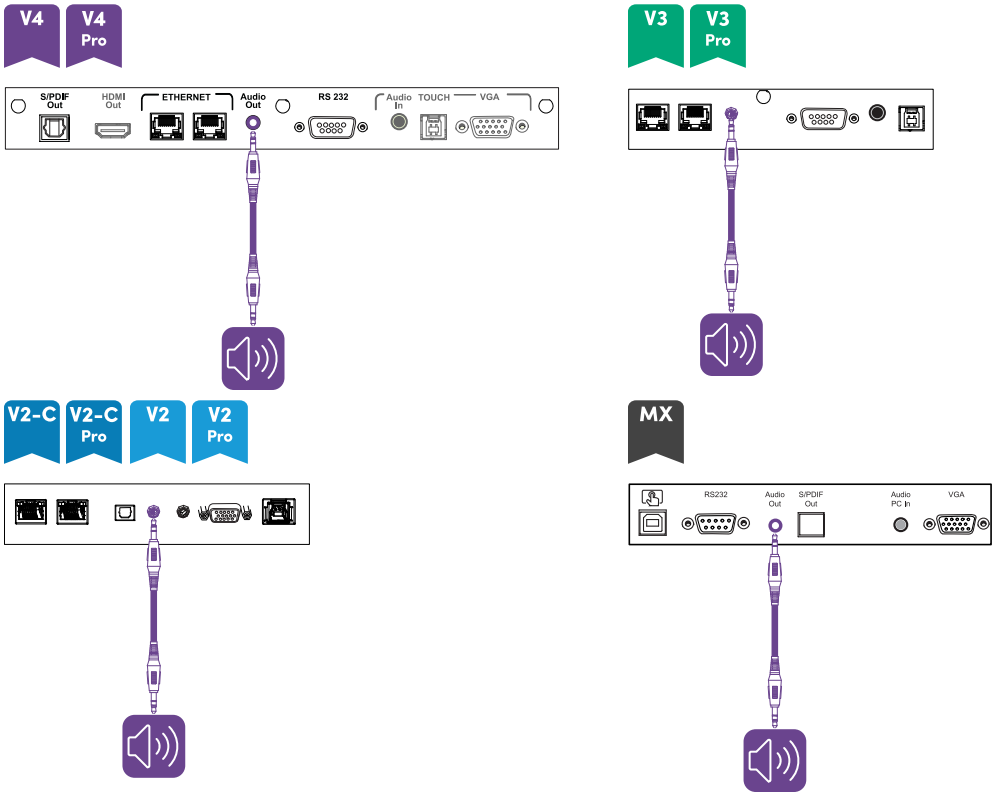

In addition to the stereo 3.5 mm out connector, the display provides a Sony/Philips Digital Interface (S/PDIF) out connector. S/PDIF is a digital audio transmission medium. You need an audio system that has an S/PDIF input to decode this connection to analog. Most external sound bars include a S/PDIF connector.

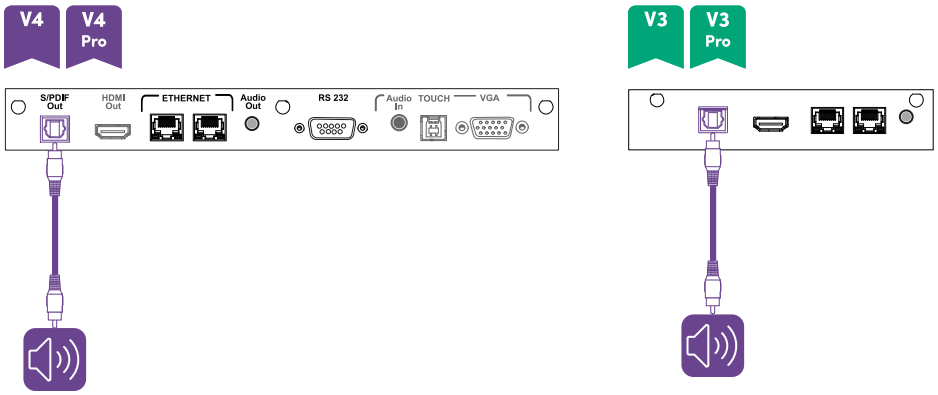

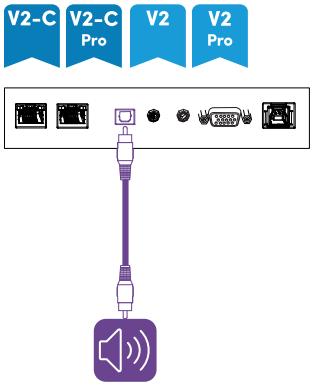

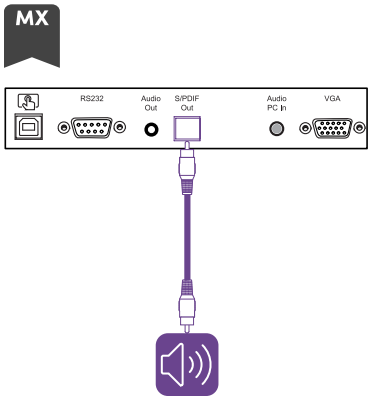

> **Note**
>
> The S/PDIF audio is a fixed-volume output. Adjusting the display's volume for its internal speakers does not affect the volume output of the S/PDIF port.

Connecting room control systems

A room control system enables users to control a room's lighting, audio system, and possibly, the display. Some installations may require you to integrate the display with a room control system.

You can use the display's RS-232 connector to connect a third-party external control system to the display (see *Appendix D Managing SMART Board MX (V2), MX Pro (V2), and later series models using RS-232* on page 106 and *Appendix E Managing SMART Board MX series models using RS-232* on page 117).

> **Note**
>
> Displays are not compatible with centralized remote control systems, such as a universal remote control.

Connector diagrams

V4 V4 Pro

Side and bottom connector panels

This diagram and table present the connectors on SMART Board MX (V4) and MX Pro (V4) series models' side and bottom connector panels:

Side

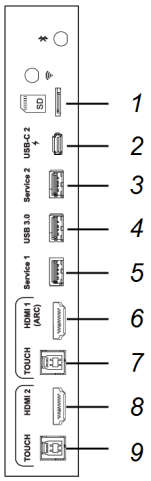

Bottom

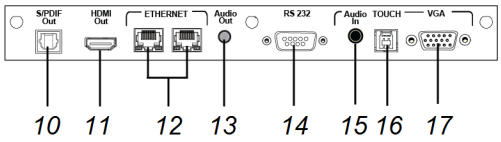

No.	Connector	Connects to	Notes
1	Micro SD	[N/A]	[N/A]
2	USB Type-C	USB Type-C 2 input	See page 39 and USB cables and connectors.
3	USB 3.0 Type-A	[N/A]	This connector is a service port.
4	USB 3.0 Type-A	Supported USB drives, peripherals, and other devices	See page 48 and USB cables and connectors.
5	USB 2.0 Type-A	[N/A]	This connector is a service port.
6	HDMI 2.0 in	HDMI 1 input (video and audio)	See page 39 and HDMI cables and connectors.
7	USB 3.0 Type-B	HDMI 1 input (touch)	See page 39 and USB cables and connectors.

No.	Connector	Connects to	Notes
8	HDMI 2.0 in	HDMI 2 input (video and audio)	See page 39 and HDMI cables and connectors.
9	USB 3.0 Type-B	HDMI 2 input (touch)	See page 39 and USB cables and connectors.
10	S/PDIF out	Digital audio output	See page 53 and Digital audio cables and connectors.
11	HDMI 2.0 out	External display	See *Connecting an external display* on page 53 and HDMI cables and connectors. Not all SMART Board MX (V4) series models include this connector.
12	RJ45 (×2)	Network	See page 30 and Ethernet (network) cables and connectors.
13	Stereo 3.5 mm out	External audio system	See page 53 and Analog audio cables and connectors.
14	RS-232	Room control system	See page 106 and RS-232 cables and connectors.
15	Stereo 3.5 mm in	VGA input (audio)	See page 39 and Analog audio cables and connectors. Not all SMART Board MX (V4) series models include this connector.
16	USB 3.0 Type-B	VGA input (touch)	See page 39 and USB cables and connectors. Not all SMART Board MX (V4) series models include this connector.
17	VGA in	VGA input (video)	See page 39 and VGA cables and connectors. Not all SMART Board MX (V4) series models include this connector.

Front connector panel

This diagram and table present the connectors on SMART Board MX (V4) and MX Pro (V4) series models' front connector panels:

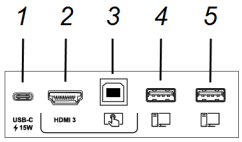

No.	Connector	Connects to	Notes
1	USB Type-C	USB Type-C 1 input	See page 39 and USB cables and connectors.
2	HDMI 2.0 in	HDMI 3 input (video and audio)	See page 39 and HDMI cables and connectors.
3	USB 3.0 Type-B	HDMI 3 input (touch)	See page 39 and USB cables and connectors.
4	USB 2.0 Type-A	Supported USB drives, peripherals, and other devices	See page 48 and USB cables and connectors.
5	USB 2.0 Type-A	Supported USB drives, peripherals, and other devices	See page 48 and USB cables and connectors.

V3 V3 Pro

Side and bottom connector panels

This diagram and table present the connectors on SMART Board MX (V3) and MX Pro (V3) series models' side and bottom connector panels:

Side

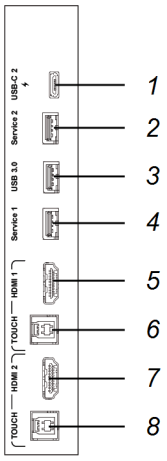

Bottom

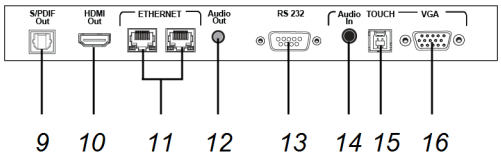

No.	Connector	Connects to	Notes
1	USB Type-C	USB Type-C 2 input	See page 39 and USB cables and connectors.
2	USB 3.0 Type-A	[N/A]	This connector is a service port.
3	USB 3.0 Type-A	Supported USB drives, peripherals, and other devices	See page 48 and USB cables and connectors.
4	USB 2.0 Type-A	[N/A]	This connector is a service port.
5	HDMI 2.0 in	HDMI 1 input (video and audio)	See page 39 and HDMI cables and connectors.
6	USB 3.0 Type-B	HDMI 1 input (touch)	See page 39 and USB cables and connectors.
7	HDMI 2.0 in	HDMI 2 input (video and audio)	See page 39 and HDMI cables and connectors.
8	USB 3.0 Type-B	HDMI 2 input (touch)	See page 39 and USB cables and connectors.
9	S/PDIF out	Digital audio output	See page 53 and Digital audio cables and connectors.

No.	Connector	Connects to	Notes
10	HDMI 2.0 out[2]	External display	See *Connecting an external display* on page 53 and HDMI cables and connectors.
11	RJ45 (×2)	Network	See page 30 and Ethernet (network) cables and connectors.
12	Stereo 3.5 mm out	External audio system	See page 53 and Analog audio cables and connectors.
13	RS-232	Room control system	See page 106 and RS-232 cables and connectors.
14	Stereo 3.5 mm in	VGA input (audio)	See page 39 and Analog audio cables and connectors.
15	USB 3.0 Type-B	VGA input (touch)	See page 39 and USB cables and connectors.
16	VGA in	VGA input (video)	See page 39 and VGA cables and connectors.

Front connector panel

This diagram and table present the connectors on SMART Board MX (V3) and MX Pro (V3) series models' front connector panels:

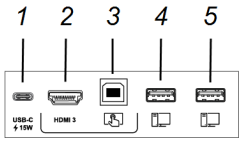

No.	Connector	Connects to	Notes
1	USB Type-C	USB Type-C 1 input	See page 39 and USB cables and connectors.
2	HDMI 2.0 in	HDMI 3 input (video and audio)	See page 39 and Analog audio cables and connectors.
3	USB 3.0 Type-B	HDMI 3 input (touch)	See page 39 and USB cables and connectors.
4	USB 2.0 Type-A	Supported USB drives, peripherals, and other devices	See page 48 and USB cables and connectors.

[2]SMART Board MX (V3N) models do not include an HDMI Out connector.

No.	Connector	Connects to	Notes
5	USB 2.0 Type-A	Supported USB drives, peripherals, and other devices	See page 48 and USB cables and connectors.

V2-C V2-C Pro V2 V2 Pro

Side and bottom connector panels

This diagram and table present the connectors on the display's side and bottom connector panels:

Side

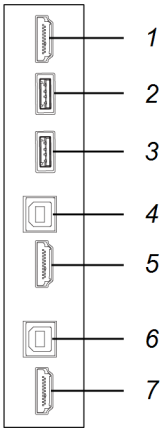

Bottom

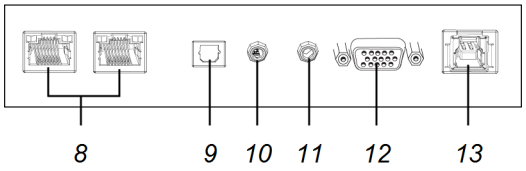

No.	Connector	Connects to	Notes
1	HDMI 2.0 out	External display	See *Connecting an external display* on page 53 and HDMI cables and connectors.
2	USB 2.0 Type-A	N/A	This connector is a service port.
3	USB 3.2 Gen 1 Type-A	Supported USB drives, peripherals, and other devices	See page 48 and USB cables and connectors.
4	USB 3.2 Gen 1 Type-B	HDMI 1 input (touch)	See page 39 and USB cables and connectors.
5	HDMI 2.0 in	HDMI 1 input (video and audio)	See page 39 and HDMI cables and connectors.
6	USB 3.2 Gen 1 Type-B	HDMI 2 input (touch)	See page 39 and USB cables and connectors.

No.	Connector	Connects to	Notes
7	HDMI 2.0 in	HDMI 2 input (video and audio)	See page 39 and HDMI cables and connectors.
8	RJ45 (×2)	Network	See page 30 and Ethernet (network) cables and connectors.
9	S/PDIF out	Digital audio output	See page 53 and Digital audio cables and connectors.
10	Stereo 3.5 mm out	External audio system	See page 53 and Analog audio cables and connectors.
11	Stereo 3.5 mm in	VGA input (audio)	See page 39 and Analog audio cables and connectors.
12	VGA in	VGA input (video)	See page 39 and VGA cables and connectors.
13	USB 3.2 Gen 1 Type-B	VGA input (touch)	See page 39 and USB cables and connectors.

Front connector panel

This diagram and table present the connectors on SMART Board MX (V2-C and V2) and MX Pro (V2-C and V2) series models' front connector panels:

V2-C V2-C Pro

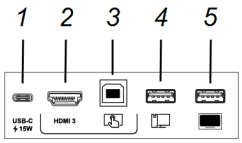

V2 V2 Pro

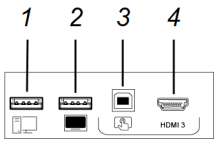

No.	Connector	Connects to	Notes
1	USB 2.0 Type-A	Supported USB drives, peripherals, and other devices	See page 48 and USB cables and connectors.
2	USB 2.0 Type-A	Supported USB drives	Connect a USB drive to update the display's firmware.
3	USB 2.0 Type-B	HDMI 3 input (touch)	See page 39 and USB cables and connectors.
4	HDMI 2.0 in	HDMI 3 input (video and audio)	See page 39 and Analog audio cables and connectors.
5	USB Type-C	USB Type-C input	See page 39 and USB cables and connectors.

MX

Side and bottom connector panels

This diagram and table present the connectors on SMART Board MX series models' side and bottom connector panels:

Side

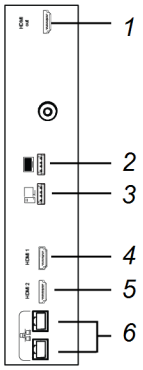

Bottom

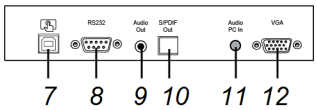

No.	Connector	Connects to	Notes
1	HDMI 1.4 out (HDCP-compliant)	External monitor	This connector is HDCP-encrypted HDMI. **Note** HDMI out is an optional feature. Contact your authorized SMART reseller (smarttech.com/where) for further ordering instructions.
2	USB 2.0 Type-A	Supported USB drives, peripherals, and other devices	Connect a USB drive to update the display's firmware. **Note** If you're troubleshooting an issue with the display, connect a USB mouse to navigate the display's on-screen menu.
3	USB 2.0 Type-A	Supported USB drives, peripherals, and other devices	See page 48 and USB cables and connectors.
4	HDMI 2.0 in	HDMI 1 input (video and audio)	See page 39 and HDMI cables and connectors.

No.	Connector	Connects to	Notes
5	HDMI 2.0 in	HDMI 2 input (video and audio)	See page 39 and HDMI cables and connectors.
6	RJ45 (×2)	Network	See page 30 and Ethernet (network) cables and connectors.
7	USB 2.0 Type-B	HDMI 1, HDMI 2, or VGA input (touch)	See page 39 and USB cables and connectors.
8	RS-232	Room control system	See page 117 and RS-232 cables and connectors.
9	Stereo 3.5 mm out	External audio system	See page 53 and Analog audio cables and connectors.
10	S/PDIF out	Digital audio output	See page 53 and Digital audio cables and connectors.
11	Stereo 3.5 mm in	VGA input (audio)	See page 39 and Analog audio cables and connectors.
12	VGA in	VGA input (video)	See page 39 and VGA cables and connectors.

Front connector panel

This diagram and table present the connectors on SMART Board MX series models' front connector panels:

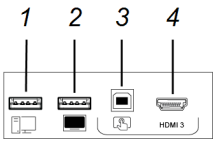

No.	Connector	Connects to	Notes
1	USB 2.0 Type-A	Supported USB drives, peripherals, and other devices	See page 48 and USB cables and connectors.
2	USB 2.0 Type-A	Supported USB drives	Connect a USB drive to update the display's firmware.
3	USB 2.0 Type-B	HDMI 3 input (touch)	See page 39 and USB cables and connectors.
4	HDMI 1.4 in	HDMI 3 input (video and audio)	See page 39 and Analog audio cables and connectors.

AM40 and AM50 appliances

See iQ appliance connector panel.

Chapter 4 **Maintaining the display**

Turning off, turning on, and restarting the display 66
Cleaning and maintaining hardware 68
Checking the display installation 68
Cleaning the screen 68
Cleaning the touch sensors 69
Maintaining ventilation 69
Preventing condensation 70
Replacing the pens 70
Removing and transporting the display 70
Configuring the network for SMART Board MX series models' firmware update 71
Updating SMART Board MX series models' firmware 72
Updating iQ system software 73
Applying an automatic system software update manually 73
Updating system software manually 73
Orienting the display 73

With proper maintenance, the display will provide years of use.

Turning off, turning on, and restarting the display

In most situations, you can put the display into Sleep or Standby when not using it by following the instructions in the *SMART Board MX and MX Pro series interactive displays user guide* (smarttech.com/kb/171554).

In some situations, such as when you transport the display or clean its screen, you need to turn the display off. You can turn it back on after. You can also restart the display.

To turn the display off

V4 V4 Pro V3 V3 Pro V2-C V2-C Pro V2 V2 Pro

1. Press the **Power** button ⏻ on the front control panel or the remote control for five seconds.

   A slider appears on the screen.

2. Move the slider to the right.
3. Flick the switch beside the AC power inlet to the OFF (O) position.

> **Note**
>
> Wait at least 30 seconds before turning the display back on.

MX

Press the **Power** button ⏻ on the front control panel for two seconds.

To turn the display back on

V4 V4 Pro V3 V3 Pro V2-C V2-C Pro V2 V2 Pro

> **Note**
>
> Touch is not available immediately after waking or turning on the display. Wait a few seconds, and then the display will respond to touch.

1. Flick the switch beside the AC power inlet to the ON (I) position.
2. Press the **Power** button ⏻ on the front control panel or the remote control.

MX

Press the **Power** button ⏻ on the front control panel.

To reset the display

V4 V4 Pro V3 V3 Pro V2-C V2-C Pro V2 V2 Pro

Press and hold the **Power** button ⏻ on the front control panel or the remote control for 10 seconds.

The display resets.

MX

1. Flick the switch to the OFF (O) position.
2. Flick the switch to the ON (|) position.

   The display and iQ appliance reset.

Cleaning and maintaining hardware

Checking the display installation

Inspect the display installation frequently to ensure that the display remains securely installed.

- Check the mounting location for signs of damage or weakness that can occur over time.
- Check for loose screws, gaps, distortions, or other issues that could occur with the mounting hardware.

If you find an issue, contact a trained installer.

Cleaning the screen

Follow these instructions to clean the screen without damaging its anti-glare coating or other product components.

Caution

- Do not use permanent or dry-erase markers on the screen. If dry-erase markers are used on the screen, remove the ink as soon as possible with a lint-free, non-abrasive cloth.
- Do not rub the screen with dense or rough material.
- Do not apply pressure to the screen.
- Do not use cleaning solutions or glass cleaners on the screen. They can damage or discolor the screen.

To clean the screen

1. Turn off any connected computers.
2. Turn off the display (see *Turning off, turning on, and restarting the display* on page 66).
3. Wipe the screen with a lint-free, non-abrasive cloth.

> **Note**
>
> You can also use a damp cloth with a drop of dish soap, or follow the instructions in the knowledge base article, How to clean SMART Board surfaces and accessories.

Cleaning the touch sensors

The display uses infrared (IR) transmitters and sensors around the display's perimeter between the screen and the frame. Dust buildup on the protective plastic can impair touch performance. Inspect these areas for dust and clean them every week.

> ⚠ **Caution**
>
> - Do not use compressed air to clean the sensors or borders.
> - Do not use water or cleaning agents to clean the touch sensors.
> - Do not apply too much pressure when cleaning the display because you can damage the plastic.

To clean the IR transmitters and sensors

1. With a clean lint-free, non-abrasive cloth, gently wipe the plastic between the screen and the frame around the perimeter of the display's screen.
2. If dirt still remains, use 50% isopropyl alcohol (IPA) to clean the protective plastic between the screen and the frame.

Maintaining ventilation

The display requires proper ventilation. Dust buildup in the ventilation holes compromises cooling and can lead to product failure.

- Clean accessible ventilation holes monthly with a dry cloth.
- Use a vacuum cleaner with a narrow hose end fitting to clear the back ventilation holes regularly. You might have to remove the display from the wall.

  For more information about removing the display, see *Removing and transporting the display* on the next page.

Caution

Avoid setting up or using the display in an area with excessive levels of dust, humidity, smoke, or chemical fumes.

Preventing condensation

If the display has been moved from a cold environment to a warmer one (for example, from storage to the installation site), let the display sit for a few hours to allow it to acclimate to the new temperature. Failing to do so can cause humidity to build up in the space between the front glass and the LCD.

If condensation appears under the screen after you turn on the display, select an active video source and leave the display on for 48 hours. If the condensation doesn't dissipate, contact SMART support if the display is still under warranty.

If there is enough moisture between the layers to cause the moisture to drip and run, remove power immediately and contact SMART Support if the display is still under warranty.

Replacing the pens

To prevent damage to the display's anti-glare surface, replace a pen if its nib becomes worn. You can purchase replacement pens from the Store for SMART Parts (see smarttech.com/Support/PartsStore).

Note

For pen part numbers, refer to the service parts diagrams.

Removing and transporting the display

If the display is wall mounted, you might need to remove it from its current location and transport it to another location on occasion.

To remove the display safely, use two or more trained installers.

Warning

- Do not attempt to move the display by yourself. The display is very heavy.
- Do not move the display by connecting a rope or wire to the handles on the back. The display can fall and cause injury and product damage.

Important

Follow any documentation included with the third-party mounting hardware.

To remove the display

1. Turn off connected computers.
2. Turn off the display by pressing and holding the **Power** button ⏻ on the front control panel for four seconds.
3. Flick the switch on the back of the display to the OFF (O) position.
4. Remove all accessible cables, connectors, and antennas.
5. Remove any modules from the accessory slot.
6. Lift the display from its mounting location and insert it into its original shipping box.

   Warning

   Do not place the display on a sloping or unstable cart, stand, or table. The display could fall, resulting in injury and severe product damage.

   Caution

   Do not leave the display face up, face down, or upside down for an extended period. This could cause permanent damage to the screen.
7. Remove the mounting brackets.

To transport the display

See *Moving the display to the installation site* on page 21.

Configuring the network for SMART Board MX series models' firmware update

MX

You can connect the display to a network using Wi-Fi or an Ethernet connection. Before connecting the display, your organization's network administrators need to configure the network to allow automatic firmware updates.

To configure the network

1. Open the port required for automatic firmware updates:

Protocol	Port range
TCP	80

2. Add the following URLs to the network allowlist:
   - http://api.lango-tech.cn
   - http://lango-tech.cn/
   - http://otaa.lango-tech.cn
   - http://otag.lango-tech.cn
   - http://downloads.smarttech.com

Updating SMART Board MX series models' firmware

MX

The display checks for firmware updates automatically, provided the display's date and time are set correctly (see *System settings* on page 82) and the display is connected to the internet. The display notifies you when a firmware update is available.

When a display is connected to the internet and an update for the display's firmware is available, the display shows a message that an update is available.

- Tap **Update** to update the display's firmware.
- Tap **Ignore** to skip that specific firmware update. The display won't apply that update even if you check for updates manually.
- Tap **Cancel** to update the display's firmware later.

The display applies the firmware update automatically if no options are selected after a short time.

When the update is installing, touch, the front control panel, and the remote control will not respond.

To make sure the network is configured properly for firmware updates, see *Configuring the network for SMART Board MX series models' firmware update* on the previous page.

To update the display's iQ system software, see *Updating iQ system software* on the next page.

Updating iQ system software

When the display is connected to the internet, it updates its system software automatically.

When a system software update is available, the display downloads the update in the background then waits for four hours of inactivity. When that happens, the display shows a two-minute countdown before beginning the update. The countdown can be interrupted at any time. The update begins when the countdown finishes. The display shows a blank screen for four minutes. When the update is complete, the display shows the Home screen.

When the update is installing, touch, the front control panel, and the remote control will not respond.

To update SMART Board MX series firmware, see *Updating SMART Board MX series models' firmware* on the previous page.

> **Note**
>
> You can configure your organization's network to allow or prevent automatic system software updates (see Connecting to a network).

Applying an automatic system software update manually

If the display has downloaded the system software update but hasn't yet applied the update, you can start the update process manually from Settings.

To apply an automatic iQ system software update manually

1. From the Home screen, tap **Settings** .
2. Scroll to **Auto Update**.
3. Under *Check for Updates Now*, tap **Apply Update Now**.

Updating system software manually

You can download system software updates at smarttech.com/downloads and update your display using a USB drive.

Orienting the display

Orient the display if the display is connected to a computer and the pointer appears a distance from the actual contact when you touch the screen.

> **Note**
>
> You can use your finger or a pen to orient the display.

To orient the display when connected to a computer

1. Tap in the notification area (Windows) or Mac menu bar (macOS), and select **Orient**.
2. Tap the red targets as they appear. Hold your finger or the tip of the pen at the center of each target, and then lift the pen or finger. When you lift the pen or finger, the target moves to the next orientation point.

   > **Important**
   >
   > Hold the pen at a right angle to the screen.

3. Continue until you've pressed all the targets.

   The orientation window closes.

Chapter 5 **Troubleshooting**

Troubleshooting the display and related SMART products

See Troubleshooting for information on how to resolve a variety of common problems with the display and related SMART products.

Contacting your reseller for additional support

If an issue you're experiencing with the display persists or isn't covered in this chapter or the knowledge base, contact your authorized SMART reseller (smarttech.com/where) for support.

Your reseller might ask you for the display's serial number.

V4 | V4 Pro | V3 | V3 Pro | V2-C | V2-C Pro | V2 | V2 Pro

The serial number is on a label located on the left side of the display (pictured).

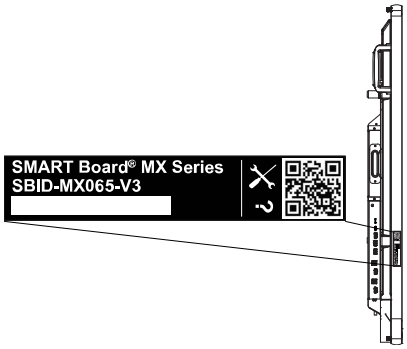

> **Tip**
>
> Scan the QR code on the label to view the SMART Board MX or MX Pro series interactive display support pages on the SMART website.

MX

The serial number is on labels located on the bottom frame and the back of the display.

> **Note**
>
> To find the serial number for the iQ appliance and Intel Compute Card, see Getting support and finding serial numbers for your iQ appliance and Intel Compute Card.

You can also find the serial number in the settings (see *System settings* on page 82).

Appendix A **Adjusting iQ settings**

Network settings 77
Personalization 78
Application settings 79
System settings 82

V4 V3 V2-C V2-C Pro V2 V2 Pro MX

You can access settings using the icon on the Home screen.

Notes

- Settings can apply to a user or to the entire system. User-level settings change depending on the user who is signed in. System-level settings apply to all users. See the settings for more information.
- Some settings aren't available while you're signed in to your SMART Account. Sign out of your SMART Account on the display to see all settings.

Network settings

Option	Values	Function	Notes	User or system setting
▸ **Wi-Fi**				
▸ **Wi-Fi**	On Off	Enables or disables Wi-Fi on the display.	Turn on Wi-Fi to discover networks.	System
• [Wi-Fi network name]	N/A	Shows information about the connected wireless network.	N/A	System
• Wi-Fi MAC address	N/A	Shows the MAC address of the display's Wi-Fi network adapter.	N/A	System

Option	Values	Function	Notes	User or system setting
• Wi-Fi IP address	N/A	Shows the IP address of the display's Wi-Fi network adapter.	N/A	System
▸ **SMART iQ Ethernet**				
▸ **Advanced options**				
• Static IP (Use DHCP)	On Off	Enables or disables DHCP to assign an IP address to the display.	N/A	System
• Proxy (Use proxy)	On Off	Enables or disables a proxy server for connecting to the network.	N/A	System
• Proxy (Auto-configure)	On Off	Enables or disables automatic configuration of the proxy server for connecting to the network.	N/A	System
• MAC Address	N/A	Shows the MAC address of the display's Ethernet network adapter.	N/A	System
• IP Address	N/A	Shows the IP address of the display's Ethernet network adapter.	N/A	System
▸ **Bluetooth**				
• Bluetooth	On Off	Enable or disable the display's Bluetooth.	Turn on Bluetooth to view available Bluetooth devices.	System
• View available Bluetooth devices	N/A	Shows available Bluetooth devices.	Turn on Bluetooth to view available Bluetooth devices.	System
▸ **SMART Cloud**				
• Service Region	N/A	Shows the service region.	N/A	System

Personalization

> **Note**
>
> If iQ is disabled, these settings are not available.

Option	Values	Function	Notes	User or system setting
• Wallpaper	[Wallpapers]	Select the wallpaper that appears in the background.	1920 × 1080 images work best. The display supports .png and .jpg file formats. See > Changing the display's wallpaper	User

Application settings

> **Note**
>
> If iQ is disabled, these settings are not available.

Option	Values	Function	Notes	User or system setting
▸ **Launcher**				
• Browser	On Off	Enables or disables Browser in the Apps Library.	N/A	User
• Input	On Off	Enables or disables Input in the Apps Library.	V4 V4 Pro V3 V3 Pro V2-C V2-C Pro V2 V2 Pro	N/A
• Screen Share	On Off	Enables or disables Screen Share in the Apps Library.	N/A	User
▸ **Files Library**				
▸ **Whiteboard Storage**				
• Default Whiteboard Location	My Files > Lumio My Files > Board Files	Sets where new whiteboard files are saved when you're signed in to your SMART Account.	See > Syncing SMART Notebook and Lumio files to the iQ experience	User
▸ **Files Storage**				
• Allow Google Drive integration in Files Library	On Off	Enables or disables access to Google Drive™ when you're signed in to your SMART Account.	V2-C V2-C Pro V2 V2 Pro MX See > Opening your Google Drive or OneDrive on the display	User
• Allow OneDrive integration in Files Library	On Off	Enables or disables access to OneDrive™ when you're signed in to your SMART Account.	V2-C V2-C Pro V2 V2 Pro MX See > Opening your Google Drive or OneDrive on the display	User
▸ **SMART Whiteboard**				
▸ **Whiteboard Storage**				

Option	Values	Function	Notes	User or system setting
• Allow saving	On Off	Enables or disables saving SMART Whiteboard sessions.	N/A	System
• Whiteboard deletion policy	Delete after 1 week Delete after 1 Month Delete manually	Sets how long SMART Whiteboards are saved.	N/A	System
▸ **Other**				
• Write or draw with your finger	On Off	When enabled, you can write with your finger. Default is off.	V3 V3 Pro V4 V4 Pro	User
• Enable Whole-class Whiteboard	On Off	Enable or disable the ability to start a collaborative whiteboard.	V3 V3 Pro V4 V4 Pro	User
▸ **Screen Share**				
• Default Screen Share App	SMART Screen Share	Sets the default screen share app to be used when you select Screen Share from the main screen.	V2-C V2-C Pro V2 V2 Pro MX SMART Screen Share is selected by default.	System
• Require Permission	On Off	Enables or disables automatic connection from a device sharing its screen.	V2-C V2-C Pro V2 V2 Pro MX	System
• AirPlay	On Off	Enables or disables the AirPlay protocol.	V2-C V2-C Pro V2 V2 Pro MX AirPlay is enabled by default.	System
• Google Cast	On Off	Enables or disables the Google Cast protocol.	V2-C V2-C Pro V2 V2 Pro MX Google Cast is enabled by default.	System
• Miracast	On Off	Enables or disables the Miracast protocol.	V2-C V2-C Pro V2 V2 Pro MX Miracast is enabled by default. **Important** Devices that use AirPlay and Google Cast can't connect to the display while a Miracast device is connected.	System
• Performance Logging	On Off	SMART Support may ask users to enable Performance Logging to help diagnose issues.	V2-C V2-C Pro V2 V2 Pro MX Performance Logging is disabled by default.	System

Option	Values	Function	Notes	User or system setting
• Auto-disconnect from Wifi for Miracast	On Off	When enabled, the display disconnects from the network when a device shares its screen using Miracast.	V2-C V2-C Pro V2 V2 Pro MX SMART recommends enabling this setting for areas with high network saturation or busy networks. **Important** Only one device can connect to the display when Miracast is enabled. This setting used to be named "Miracast Connection Handling"	System
• Use Web Player	On Off	When enabled, the display uses a different method to stream videos.	V2-C V2-C Pro V2 V2 Pro MX If this method doesn't work, disable it to return to the original method.	System
▸ **Notifications**				
• Do not disturb	On Off	When enabled, the display doesn't show notifications for apps.	N/A	System
• [Apps]	On Off	When enabled, the display shows notifications for apps.	N/A	User
▸ **Installed Apps**				
• Allow App Store	On Off	When enabled, the App Store is available and the display can download and install new apps.	N/A	User
▸ **Annotation**				
▸ Annotation				
• Enable annotation layers	On Off	Enables or disables annotations on the Home screen, video input, and most apps.	V3 V3 Pro V4 V4 Pro	User
• Reset annotation layer	N/A	Resets the annotation layer if it stops working over a supported application.	V3 V3 Pro V4 V4 Pro	User
▸ **Enable annotations on installed apps**				
• [Apps]	On Off	Enables or disables annotations on installed apps.	V3 V3 Pro V4 V4 Pro	User
▸ **SMART iQ apps**				

Option	Values	Function	Notes	User or system setting
• [Apps]	On Off	Enables or disables annotations on default iQ apps.	V3 V3 Pro V4 V4 Pro	User
• Show apps drawer	On Off	When disabled, users cannot access the Apps library.	V3 V3 Pro V4 V4 Pro	System

System settings

Option	Values	Function	Notes	User or system setting
▸ **System**				
• Access to USB mass storage devices	On Off	Enables or disables access to a USB drive.	V4 V4 Pro V3 V3 Pro V2-C V2-C Pro V2 V2 Pro	System
• Enable NFC	On Off	Enables or disables NFC for SMART Account sign-in.	V4 V4 Pro	System
▸ **Advanced Options**				
• SMART Board with iQ	On Off	Enables or disables the iQ experience.	V4 V4 Pro V3 V3 Pro V2-C V2-C Pro V2 V2 Pro	System
• Default input	Inputs available on the display.	Select the default input the display will use when starting.	V4 V4 Pro V3 V3 Pro V2-C V2-C Pro V2 V2 Pro The iQ embedded experience is the default input.	System
▸ **Advanced Pen & Touch Settings**				
• Touch controller firmware version	N/A	Update or roll back the touch controller firmware version.	V4 V4 Pro V3 V3 Pro V2-C V2-C Pro V2 V2 Pro	N/A
• Automatically update the touch controller	N/A	Select to update whenever a new version of the touch controller firmware is released.	V4 V4 Pro V3 V3 Pro V2-C V2-C Pro V2 V2 Pro	N/A
▸ **Power**				

Option	Values	Function	Notes	User or system setting
• Turn screen off after	Disabled 1 min 5 mins 30 mins 1 hour 1.5 hours 2 hours 5 hours 10 hours	Sets the number of minutes of inactivity before the display goes in to an energy saving mode.	V4 V4 Pro V3 V3 Pro V2-C V2-C Pro V2 V2 Pro The default is 60 minutes.	System
▸ Energy Saver				
• Go to energy saving mode after	Disabled 1 min 5 mins 30 mins 1 hour 1.5 hours 2 hours 5 hours 10 hours	Sets the number of minutes of inactivity before the display enters an energy saving mode.	V4 V4 Pro V3 V3 Pro V2-C V2-C Pro V2 V2 Pro The default is 60 minutes.	System
• Standby (Shutdown)	N/A	If selected, the display will turn off all running components to achieve maximum energy savings but wakes up slower.	V4 V4 Pro V3 V3 Pro V2-C V2-C Pro V2 V2 Pro This option is more energy efficient. This option is the default for displays in the EU. For information about the display's energy saving modes, see *About energy saving modes* on page 37.	System
• Networked Standby (Sleep)	N/A	If selected, the display wakes up faster and can be turned on up by a Wake on LAN command from the network.	V4 V4 Pro V3 V3 Pro V2-C V2-C Pro V2 V2 Pro This option is less energy efficient. This option is the default for displays not in the EU. For information about the display's energy saving modes, see *About energy saving modes* on page 37.	System
▸ **External Inputs**				
• Apply power settings even when displaying an external video source	On Off	If enabled, the display will enter an energy saving mode even when an external video input is connected.	V4 V4 Pro V3 V3 Pro V2-C V2-C Pro V2 V2 Pro	System
▸ **Display**				

Option	Values	Function	Notes	User or system setting
▸ **Screen Adjustment**				
• Brightness	0–100	Sets the overall brightness of the image.	V4 V4 Pro V3 V3 Pro V2-C V2-C Pro V2 V2 Pro If Auto Brightness is enabled and the brightness slider is moved quickly left or right, the image on the screen flickers. This will be fixed in a future system software release.	System
• Auto Brightness	On Off	Enables or disables the automatic brightness adjustment depending on the ambient light level.	V4 V4 Pro V3 V3 Pro V2-C V2-C Pro V2 V2 Pro	System
▸ **Advanced Display Options**				
• [Various]	[Various]	Change display settings such as brightness, color temperature, contrast and so on.	V4 V4 Pro V3 V3 Pro V2-C V2-C Pro V2 V2 Pro The advanced display options available vary depending on the display model.	System
▸ **HDMI Output**				
• Default resolution	Auto 4K60 1080p60 720p60 640x480p60	Sets the HDMI out resolution.	V4 V4 Pro V3 V3 Pro V2-C V2-C Pro V2 V2 Pro The HDMI output may not be visible for several seconds when you change the output resolution on SMART Board MX (V4 and V3) and MX Pro (V4 and V3) models. SMART Board MX (V4 and V3N) models do not include an HDMI out connector. SMART Board MX (V4) models do not include an HDMI out connector. SMART Board MX (V3N) models do not include an HDMI out connector.	System
▸ **HDMI Input**				
• Advanced HDMI Settings	HDMI 1.0 HDMI 2.0 HDMI 3.0 OPS VGA	Sets the HDMI version, HDP pulse width, and MHL setup delay for each HDMI input.	V4 V4 Pro V3 V3 Pro V2-C V2-C Pro V2 V2 Pro You can also enable or disable strictly conformant HDMI Input DDC SDA timing and forbid or allow HDCP 2.2 with older receivers.	System

Option	Values	Function	Notes	User or system setting
• Go to the Input Lobby when there is no signal	On Off	When enabled, show the input previews when there is no signal.	V4 V4 Pro V3 V3 Pro V2-C V2-C Pro V2 V2 Pro	System
▸ **Audio**				
▸ Audio In				
• Volume	Range slider	Sets the microphone's gain.	V4 V4 Pro	System
• Built-in microphone	On Off	Enables or disables the display's built-in microphone. The default is on.	V4 V4 Pro	System
• Noise suppression	On Off	Enables or disables the noise suppression filter for the display's built-in microphone. The default is on.	V4 V4 Pro Enable the noise suppression filter to reduce background noise when using the display's built-in microphone.	System
▸ **Audio Out**				
• Volume	Range slider	Sets the volume from the speakers	V4 V4 Pro V3 V3 Pro V2-C V2-C Pro V2 V2 Pro	System
• Built-in Speakers	On Off	Enables or disables the display's internal speakers.	V4 V4 Pro V3 V3 Pro V2-C V2-C Pro V2 V2 Pro When analog speakers are connected to the display, the display's internal speakers are disabled automatically.	System
▸ **Audio Properties**				
• Balance	Range slider	Sets the audio output from the speakers.	V4 V4 Pro V3 V3 Pro V2-C V2-C Pro V2 V2 Pro Drag the slider all the way to the left to have all audio from the left speaker. Drag the slider all the way to the right to have all the audio from the right speaker.	System
• Bass	Range slider	Sets the bass level.	V4 V4 Pro V3 V3 Pro V2-C V2-C Pro V2 V2 Pro	System
• Treble	Range slider	Sets the treble level.	V4 V4 Pro V3 V3 Pro V2-C V2-C Pro V2 V2 Pro	System
▸ **Date & Time**				
• Automatic Date & Time	On Off	Sets the display's date and time automatically.	Configure the network to allow Network Time Protocol (NTP) requests to internet time servers. See › Connecting to a network	System

Option	Values	Function	Notes	User or system setting
• Date	N/A	Sets the display's date.	Disable **Automatic date & time** to set the date manually.	System
• Time	N/A	Sets the display's time.	Disable **Automatic date & time** to set the time manually.	System
• 24 Hour Time	On Off	Shows the display's time using the 24-hour clock.	N/A	User
• Time Zone	N/A	Sets the display's time zone.	N/A	System
▸ **Language**				
• System Language	[Languages]	Sets the language for the settings menu.	To select a different language for the on-screen display menu for SMART Board MX series displays, see *Appendix C Adjusting display settings* on page 100.	User
• Ink-To-Text Language	[Languages]	Sets the language for converting writing to text.	You can install and uninstall languages. See › Configuring ink-to-text languages for the Text pen	User
• Keyboard language	Physical keyboard Use on-screen keyboard Keyboard shortcuts	Choose the settings for the on-screen keyboard	N/A	System
• **Country**	[Countries]	Sets the display's country.	N/A	System
▸ **Diagnostics**				
• Factory Reset	N/A	Resets all options to their default values.	Only administrators should reset the display.	N/A
• Save Log File to a USB key	N/A	Copy diagnostic logs to a USB drive.	The logs will be saved as a ZIP file on the USB drive.	N/A
• Submit Log file to SMART	N/A	Send diagnostic logs to SMART.	N/A	N/A
• Improve the Experience	On Off	Sends usage statistics and error reports to SMART.	N/A	User
• Support ID	[Support ID]	Shows the support ID associated with the display.	Enable this option only on the advice of SMART Support, and only in combination with the display's Support ID.	N/A
▸ **Logging Service**				

Option	Values	Function	Notes	User or system setting
• Enable Logging Service	On Off	Enables or disables saving logs to a USB drive	This option allows the temporary iQ system log files to survive a system restart, at the cost of some device storage space.	System
▸ **Log Levels**				
• Log Level RAW	On Off	Advanced logging options to be set under the direction of SMART Support	N/A	System
• Log Level SPM	On Off	Advanced logging options to be set under the direction of SMART Support	N/A	System
• Log Level RATP	On Off	Advanced logging options to be set under the direction of SMART Support	N/A	System
• Log Level SEP	On Off	Advanced logging options to be set under the direction of SMART Support	N/A	System
• Log Level EXT	On Off	Advanced logging options to be set under the direction of SMART Support	N/A	System
▸ **Security**				
• Lock Down Settings	N/A	Lock down the display's settings using a security certificate on a USB drive.	See › Locking down the Settings app	System
• Make passwords visible	On Off	Reveals characters when typing a password in an app or website	N/A	System
• Install certificates	N/A	Install security certificates to connect to a network.	N/A	System
• View certificates	N/A	View installed security certificates.	N/A	System
• View root CA certificates	N/A	View installed root CA security certificates.	N/A	System
• Automatic inactivity log out	Disabled 1 hour 8 hours 12 hours	Automatically logs a user off after a time of inactivity.	N/A	System
• Enable automatic login	On Off	Automatically logs in a user if enabled	Default is off.	System
▸ **Clean up**				

Option	Values	Function	Notes	User or system setting
• Clean Up Policy	Disabled Manually reset with the **Clean Up** button in the launcher 1 hour 2 hours 3 hours 1 day	Sets how often the display cleans up.	N/A	System
• Clean Up the browser	N/A	Closes the browser tabs and clears the history, cache, and cookies.	N/A	System
• Restore layout and background	N/A	Restores the display's Home screen to its default layout. Any customizations to pinned apps, widgets, or wall paper are reset.	V3 V3 Pro V4 V4 Pro	System
• Clean up app data and preferences	N/A	Closes open applications and clears app data and preferences.	N/A	System
▸ **Software Update**				
• Updates Channel	Stable Channel Beta Channel	Selects which iQ system software updates the display receives.	When switching from the Beta channel to the Stable channel, a factory reset occurs. See › page 82 See › Switching to the Beta channel	System
• Check for Updates Now	N/A	Checks for updates to the system software.	If an update is available, the text changes to *Apply update now*. The display must be connected to the internet to check for system software updates, or a USB drive with the system software update file must be connected to the display.	N/A
▸ **Remote Management**				
• Launch Remote Management Settings	N/A	Configure the display's connection settings with SMART Remote Management.	This option is enabled only when SMART Remote Management is enabled.	System
• Remote Management Enabled	On Off	Enables or disables SMART Remote Management on the display.	N/A	System

Option	Values	Function	Notes	User or system setting
• Radix Viso version	N/A	Shows the Radix Viso version.	N/A	System
▸ **About**				
• Board Name	N/A	Select a name for your display.	N/A	System
• Help	N/A	Shows the SMART support site for iQ.	N/A	N/A
• Send Feedback	N/A	Send a feature request to SMART.	N/A	N/A
▸ **Board Details**				
• Build Number	N/A	Shows the iQ system software's version number.	N/A	N/A
• Serial Number	N/A	Shows the display's serial number (SMART Board MX (V2 and later) and MX Pro (V2 and later) series models). Shows the iQ appliance serial number (SMART Board MX series models).	N/A	N/A
• Part Number	N/A	Shows the display's part number.	N/A	N/A
• Model Number	N/A	Shows the display's base model number. Displays purchased as 62xxS or 64xxS SKUs have a 60xxS base model number.	N/A	N/A
• Configuration	EDU-iQ (Education iQ experience) ENT-iQ (Enterprise iQ experience) ENT-NoiQ (Enterprise, display-only configuration without iQ)	Shows the display's iQ system configuration.	N/A	N/A
▸ **Firmware Details**				
• Touch controller firmware version	N/A	Shows the display's touch controller firmware version.	N/A	N/A
• Scaler version	N/A	Shows the display's scaler version.	N/A	N/A
▸ **Legal Information**				
• End User License Agreement	N/A	Shows the SMART end user license agreement.	N/A	N/A

Option	Values	Function	Notes	User or system setting
• Open Source Licenses	N/A	Shows the open source licenses.	N/A	N/A
• SMART Intellectual Property	N/A	Shows the SMART intellectual property information.	N/A	N/A

Appendix B **Adjusting iQ Pro settings**

Network settings 91
Application settings 92
System settings 93

V4 Pro V3 Pro

You can access settings using the icon on the Home screen.

Notes

- Settings can apply to a user or to the entire system. User-level settings change depending on the user who is signed in. System-level settings apply to all users. See the settings for more information.
- Some settings aren't available while you're signed in to your SMART Account. Sign out of your SMART Account on the display to see all settings.

Network settings

Option	Values	Function	Notes
▸ **Wi-Fi**			
▸ **Wi-Fi**	On Off	Enables or disables Wi-Fi on the display.	Turn on Wi-Fi to discover networks.
• [Wi-Fi network name]	N/A	Shows information about the connected wireless network.	N/A
• Wi-Fi MAC address	N/A	Shows the MAC address of the display's Wi-Fi network adapter.	N/A
• Wi-Fi IP address	N/A	Shows the IP address of the display's Wi-Fi network adapter.	N/A
▸ **SMART iQ Ethernet**			
▸ **Advanced options**			

Option	Values	Function	Notes
• Static IP (Use DHCP)	On Off	Enables or disables DHCP to assign an IP address to the display.	N/A
• Proxy (Use proxy)	On Off	Enables or disables a proxy server for connecting to the network.	N/A
• Proxy (Auto-configure)	On Off	Enables or disables automatic configuration of the proxy server for connecting to the network.	N/A
• MAC Address	N/A	Shows the MAC address of the display's Ethernet network adapter.	N/A
• IP Address	N/A	Shows the IP address of the display's Ethernet network adapter.	N/A
▸ **Bluetooth**			
• Bluetooth	On Off	Enable or disable the display's Bluetooth.	Turn on Bluetooth to view available Bluetooth devices.
• View available Bluetooth devices	N/A	Shows available Bluetooth devices.	Turn on Bluetooth to view available Bluetooth devices.
▸ **SMART Cloud**			
• Service Region	N/A	Shows the service region.	N/A

Application settings

> **Note**
>
> If iQ is disabled, these settings are not available.

Option	Values	Function	Notes
▸ **SMART Whiteboard**			
▸ **Whiteboard Storage**			
• Allow saving	On Off	Enables or disables saving SMART Whiteboard sessions.	N/A
• Whiteboard deletion policy	Delete after 1 week Delete after 1 Month Delete manually	Sets how long SMART Whiteboards are saved.	N/A
▸ **Other**			
• Write or draw with your finger	On Off	When enabled, you can write with your finger. Default is off.	N/A

Option	Values	Function	Notes
• Enable Shared Whiteboard	On Off	Enable or disable the ability to start a collaborative whiteboard.	N/A
▸ **Notifications**			
• Do not disturb	On Off	When enabled, the display doesn't show notifications for apps.	N/A
• [Apps]	On Off	When enabled, the display shows notifications for apps.	N/A
▸ **Annotation**			
▸ Annotation			
• Enable annotation layers	On Off	Enables or disables annotations on the Home screen, video input, and most apps.	N/A
• Reset annotation layer	N/A	Resets the annotation layer if it stops working over a supported application.	N/A
▸ **Enable annotations on installed apps**			
• [Apps]	On Off	Enables or disables annotations on installed apps.	N/A
▸ **SMART iQ apps**			
• [Apps]	On Off	Enables or disables annotations on default iQ apps.	N/A
• Show apps drawer	On Off	When disabled, users cannot access the Apps library.	N/A

System settings

Option	Values	Function	Notes
▸ **System**			
• Access to USB mass storage devices	On Off	Enables or disables access to a USB drive.	N/A
• Enable NFC	On Off	Enables or disables NFC for SMART Account sign-in.	V4 V4 Pro
▸ **Advanced Options**			
• SMART Board with iQ	On Off	Enables or disables the iQ experience.	N/A
• Default input	Inputs available on the display.	Select the default input the display will use when starting.	The iQ embedded experience is the default input.
▸ **Advanced Pen & Touch Settings**			

Option	Values	Function	Notes
• Touch controller firmware version	N/A	Update or roll back the touch controller firmware version.	N/A
• Automatically update the touch controller	N/A	Select to update whenever a new version of the touch controller firmware is released.	N/A
▸ **Power**			
• Turn screen off after	Disabled 1 min 5 mins 30 mins 1 hour 1.5 hours 2 hours 5 hours 10 hours	Sets the number of minutes of inactivity before the display goes in to an energy saving mode.	The default is 60 minutes.
▸ Energy Saver			
• Go to energy saving mode after	Disabled 1 min 5 mins 30 mins 1 hour 1.5 hours 2 hours 5 hours 10 hours	Sets the number of minutes of inactivity before the display enters an energy saving mode.	The default is 60 minutes.
• Standby (Shutdown)	N/A	If selected, the display will turn off all running components to achieve maximum energy savings but wakes up slower.	This option is more energy efficient. This option is the default for displays in the EU. For information about the display's energy saving modes, see *About energy saving modes* on page 37.
• Networked Standby (Sleep)	N/A	If selected, the display wakes up faster and can be turned on up by a Wake on LAN command from the network.	This option is less energy efficient. This option is the default for displays not in the EU. For information about the display's energy saving modes, see *About energy saving modes* on page 37.
▸ **External Inputs**			
• Apply power settings even when displaying an external video source	On Off	If enabled, the display will enter an energy saving mode even when an external video input is connected.	N/A

Option	Values	Function	Notes
▸ **Display**			
▸ **Screen Adjustment**			
• Brightness	0–100	Sets the overall brightness of the image.	If Auto Brightness is enabled and the brightness slider is moved quickly left or right, the image on the screen flickers. This will be fixed in a future system software release.
• Auto Brightness	On Off	Enables or disables the automatic brightness adjustment depending on the ambient light level.	N/A
▸ **Advanced Display Options**			
• [Various]	[Various]	Change display settings such as brightness, color temperature, contrast and so on.	The advanced display options available vary depending on the display model.
▸ **HDMI Output**			
• Default resolution	Auto 4K60 1080p60 720p60 640x480p60	Sets the HDMI out resolution.	The HDMI output may not be visible for several seconds when you change the output resolution on SMART Board MX (V4 and V3) and MX Pro (V4 and V3) models. SMART Board MX (V4 and V3N) models do not include an HDMI out connector. SMART Board MX (V4) models do not include an HDMI out connector. SMART Board MX (V3N) models do not include an HDMI out connector.
▸ **HDMI Input**			
• Advanced HDMI Settings	HDMI 1.0 HDMI 2.0 HDMI 3.0 OPS VGA	Sets the HDMI version, HDP pulse width, and MHL setup delay for each HDMI input.	You can also enable or disable strictly conformant HDMI Input DDC SDA timing and forbid or allow HDCP 2.2 with older receivers.
• Go to the Input Lobby when there is no signal	On Off	When enabled, show the input previews when there is no signal.	N/A
▸ **Audio**			
▸ Audio In			
• Volume	Range slider	Sets the microphone's gain.	MX-V4 Pro
• Built-in microphone	On Off	Enables or disables the display's built-in microphone. The default is on.	MX-V4 Pro

Option	Values	Function	Notes
• Noise suppression	On Off	Enables or disables the noise suppression filter for the display's built-in microphone. The default is on.	MX-V4 Pro Enable the noise suppression filter to reduce background noise when using the display's built-in microphone.
▸ **Audio Out**			
• Volume	Range slider	Sets the volume from the speakers	N/A
• Built-in Speakers	On Off	Enables or disables the display's internal speakers.	When analog speakers are connected to the display, the display's internal speakers are disabled automatically.
▸ **Audio Properties**			
• Balance	Range slider	Sets the audio output from the speakers.	Drag the slider all the way to the left to have all audio from the left speaker. Drag the slider all the way to the right to have all the audio from the right speaker.
• Bass	Range slider	Sets the bass level.	N/A
• Treble	Range slider	Sets the treble level.	N/A
▸ **Date & Time**			
• Automatic Date & Time	On Off	Sets the display's date and time automatically.	Configure the network to allow Network Time Protocol (NTP) requests to internet time servers. See › Connecting to a network
• Date	N/A	Sets the display's date.	Disable **Automatic date & time** to set the date manually.
• Time	N/A	Sets the display's time.	Disable **Automatic date & time** to set the time manually.
• 24 Hour Time	On Off	Shows the display's time using the 24-hour clock.	N/A
• Time Zone	N/A	Sets the display's time zone.	N/A
▸ **Language**			
• System Language	[Languages]	Sets the language for the settings menu.	To select a different language for the on-screen display menu for SMART Board MX series displays, see *Appendix C Adjusting display settings* on page 100.
• Ink-To-Text Language	[Languages]	Sets the language for converting writing to text.	You can install and uninstall languages. See › Configuring ink-to-text languages for the Text pen
• Keyboard language	Physical keyboard Use on-screen keyboard Keyboard shortcuts	Choose the settings for the on-screen keyboard	N/A

Option	Values	Function	Notes
• **Country**	[Countries]	Sets the display's country.	N/A
▸ **Diagnostics**			
• Factory Reset	N/A	Resets all options to their default values.	Only administrators should reset the display.
• Save Log File to a USB key	N/A	Copy diagnostic logs to a USB drive.	The logs will be saved as a ZIP file on the USB drive.
• Submit Log file to SMART	N/A	Send diagnostic logs to SMART.	N/A
• Improve the Experience	On Off	Sends usage statistics and error reports to SMART.	N/A
• Support ID	[Support ID]	Shows the support ID associated with the display.	Enable this option only on the advice of SMART Support, and only in combination with the display's Support ID.
▸ **Logging Service**			
• Enable Logging Service	On Off	Enables or disables saving logs to a USB drive	This option allows the temporary iQ system log files to survive a system restart, at the cost of some device storage space.
▸ **Log Levels**			
• Log Level RAW	On Off	Advanced logging options to be set under the direction of SMART Support	N/A
• Log Level SPM	On Off	Advanced logging options to be set under the direction of SMART Support	N/A
• Log Level RATP	On Off	Advanced logging options to be set under the direction of SMART Support	N/A
• Log Level SEP	On Off	Advanced logging options to be set under the direction of SMART Support	N/A
• Log Level EXT	On Off	Advanced logging options to be set under the direction of SMART Support	N/A
▸ **Security**			
• Lock Down Settings	N/A	Lock down the display's settings using a security certificate on a USB drive.	See › Locking down the Settings app
• Make passwords visible	On Off	Reveals characters when typing a password in an app or website	N/A
• Install certificates	N/A	Install security certificates to connect to a network.	N/A

Option	Values	Function	Notes
• View certificates	N/A	View installed security certificates.	N/A
• View root CA certificates	N/A	View installed root CA security certificates.	N/A
• Automatic inactivity log out	Disabled 1 hour 8 hours 12 hours	Automatically logs a user off after a time of inactivity.	N/A
• Enable automatic login	On Off	Automatically logs in a user if enabled	Default is off.
▸ **Clean up**			
• Clean Up Policy	Disabled Manually reset with the **Clean Up** button in the launcher 1 hour 2 hours 3 hours 1 day	Sets how often the display cleans up.	N/A
• Clean Up the browser	N/A	Closes the browser tabs and clears the history, cache, and cookies.	N/A
• Restore layout and background	N/A	Restores the display's Home screen to its default layout. Any customizations to pinned apps, widgets, or wall paper are reset.	N/A
• Clean up app data and preferences	N/A	Closes open applications and clears app data and preferences.	N/A
▸ **Software Update**			
• Updates Channel	Stable Channel Beta Channel	Selects which iQ system software updates the display receives.	When switching from the Beta channel to the Stable channel, a factory reset occurs. See › page 93 See › Switching to the Beta channel
• Check for Updates Now	N/A	Checks for updates to the system software.	If an update is available, the text changes to *Apply update now*. The display must be connected to the internet to check for system software updates, or a USB drive with the system software update file must be connected to the display.
▸ **Remote Management**			
• Launch Remote Management Settings	N/A	Configure the display's connection settings with SMART Remote Management.	This option is enabled only when SMART Remote Management is enabled.

Option	Values	Function	Notes
• Remote Management Enabled	On Off	Enables or disables SMART Remote Management on the display.	N/A
• Radix Viso version	N/A	Shows the Radix Viso version.	N/A
▸ **About**			
• Board Name	N/A	Select a name for your display.	N/A
• Help	N/A	Shows the SMART support site for iQ.	N/A
• Send Feedback	N/A	Send a feature request to SMART.	N/A
▸ **Board Details**			
• Build Number	N/A	Shows the iQ system software's version number.	N/A
• Serial Number	N/A	Shows the display's serial number (SMART Board MX (V2 and later) and MX Pro (V2 and later) series models). Shows the iQ appliance serial number (SMART Board MX series models).	N/A
• Part Number	N/A	Shows the display's part number.	N/A
• Model Number	N/A	Shows the display's base model number. Displays purchased as 62xxS or 64xxS SKUs have a 60xxS base model number.	N/A
• Configuration	EDU-iQ (Education iQ experience) ENT-iQ (Enterprise iQ experience) ENT-NoiQ (Enterprise, display-only configuration without iQ)	Shows the display's iQ system configuration.	N/A
▸ **Firmware Details**			
• Touch controller firmware version	N/A	Shows the display's touch controller firmware version.	N/A
• Scaler version	N/A	Shows the display's scaler version.	N/A
▸ **Legal Information**			
• End User License Agreement	N/A	Shows the SMART end user license agreement.	N/A
• Open Source Licenses	N/A	Shows the open source licenses.	N/A
• SMART Intellectual Property	N/A	Shows the SMART intellectual property information.	N/A

Appendix C **Adjusting display settings**

Network 100
Screen lock 101
Advanced 102
Update 103
Recovery 104
About 104
Exiting the display's settings 105

MX

You can access SMART Board MX series models' settings using the **Menu** button ☰ on the front control panel.

Network

Option	Values	Function	Notes
▸ **Ethernet**			
• Ethernet	Enable Disable	Enables or disables connecting to a network with the wired RJ45 jacks.	Enabling Ethernet disables Wi-Fi.
• Get IP address automatically	Enable Disable	The display automatically acquires an IP address from a DHCP server on your network.	Enabling Wi-Fi hotspot allows you to connect your mobile device to the display using Wi-Fi for screen sharing.
• Static IP address	Enable Disable	Enter a static IP address.	Use the on-screen keyboard or connect a USB keyboard to the USB Type-A receptacle on the front connector panel to enter information.
• **Wi-Fi**	Enable Disable	Enables or disables connecting to a network wirelessly.	Turn on Wi-Fi to discover networks. Enabling Wi-Fi disables Ethernet.
▸ **Wi-Fi hotspot**			
• Wi-Fi hotspot	Enable Disable	Enables or disables the Wi-Fi hotspot.	[N/A]

Option	Values	Function	Notes
• Set up Wi-Fi hotspot	[N/A]	Sets the network name, security, password and access point frequency.	Use the on-screen keyboard or connect a USB keyboard to the USB Type-A receptacle on the front connector panel to enter information.
• **Network status**	[N/A]	Shows information about the display's current network connection.	[N/A]

Screen lock

Option	Values	Function	Notes
▸ **Lock screen mode**			
• Lock screen mode	Enable Disable	Turns lock screen on or off.	The lock screen appears after the display wakes.
• Image	[N/A]	Select a custom image for the lock screen.	Only .png, .jpg, and .bmp files are supported Save the wallpaper file to a USB drive and insert the drive in the USB Type-A receptacle on the front control panel. See *Connector diagrams* on page 56.
• Disable	[N/A]	Turns off the custom image for the lock screen.	[N/A]
• **Lock screen password**	Enable Disable	Set a PIN to unlock the lock screen.	[N/A]
• **Settings security**	Enable Disable	Set a PIN to access certain settings.	When Settings security is enabled, only Advanced and About settings are available. To access the other settings, tap the setting and enter the PIN.

Advanced

Option	Values	Function	Notes
▸ **Display**			
• Wallpaper	[N/A]	Sets the background image on the display.	Only .png, .jpg, and .bmp files are supported Save the wallpaper file to a USB drive and insert the drive in the USB Type-A receptacle on the front control panel. See *Connector diagrams* on page 56.
• Launcher	[Apps]	Select which apps appear in the launcher.	[N/A]
• Home screen	[Apps]	Select three apps to appear on the home screen.	Tap the app you want to remove from the home screen. Then select the app you want to appear on the home screen instead.
• HDMI out	480p 1080p 4K	Select the output resolution.	Ensure the device that is receiving the display's HDMI out signal matches the selected output resolution.
• Sleep	15 minutes 30 minutes 45 minutes 60 minutes Always on	When a time interval is selected, the display's screen will turn off even if the connected computer or device is still on.	If iQ is selected, the display's screen will not turn off when a time interval is selected.
▸ **Brightness and volume**			
• Auto	[N/A]	Automatically sets the display's brightness based on the room's brightness.	The ambient light sensor can detect the room brightness and adjust the display's screen brightness.
• Manual	[N/A]	Sets the display's brightness level.	Disable **Auto** to set the brightness manually.
• Volume	[N/A]	Sets the display's volume level.	[N/A]
▸ **OTA**			
• OTA server	[OTA servers]	Sets which server the display connects to for updates.	Default is **Auto**. The display must be connected to the internet to check for system software updates.
• Automatically check for updates	Enable Disable	Enables or disables checking for and downloading updates to the display's firmware.	Enabled by default. If this is disabled, manually check for updates in *Update* on the next page.

Option	Values	Function	Notes
• **Power saving mode**	Enable Disable	Enables or disables power saving mode.	Enabled by default. When enabled, power saving mode activates after 90 minutes of inactivity. Enabling Power saving mode makes RS-232 control of the display unavailable until the display is turned on using the power button on the front control panel.
• **Default input**	OPS HDMI1 HDMI2 HDMI3 VGA	Select a default input when the display is turned on.	OPS is enabled by default.
• **Use default touch settings**	Enabled Disabled	Sets the number of touch points.	Default is Enabled. Select Enabled to use 10 touch points. Select Disabled to use 20 touch points.
• **Power on RS232**	Enabled Disabled	When enabled, RS-232 can be used to turn on the display from low power state (soft off).	Default is Disabled.
• **HDMI [connector number]-EDID version**	Default EDID 1.4 EDID 2.0	Sets the HDMI-EDID version of the display's active HDMI connector to Default, EDID 1.4, or EDID 2.0. **Note** Default is selected by default.	When Default is selected, the display automatically detects a connected device's HDMI-EDID version and switches the display's HDMI connector between EDID 1.4 and 2.0. This feature might not work consistently for older or non-compliant EDID 1.4 devices.

Update

Option	Values	Function	Notes
• **Firmware version**	[N/A]	Shows technical information about the display's scalar firmware.	To see the firmware version, use the About option (see *About* on the next page).
• **Update**	[N/A]	Checks for updates to the system software.	If an update is available, the text changes to *Apply update now.* The display must be connected to the internet to check for system software updates. Check the display's network settings. To check the network settings, see *Network* on page 100.

Recovery

Option	Values	Function	Notes
• **Restore user settings**	[N/A]	Resets any options the user might have changed.	[N/A]
• **Restore factory settings**	[N/A]	Resets all options to their default values.	Only administrators should reset the display.

About

Option	Values	Function	Notes
• **Name**	[N/A]	Select a name for your display.	This name is different from the display name set in the iQ system software.
• **RAM**	[N/A]	Shows how much RAM is installed in the display.	[N/A]
• **Local storage**	[N/A]	Shows how much storage memory is available and how much is currently in use.	[N/A]
• **Resolution**	[N/A]	Shows the display's current screen resolution.	[N/A]
• **Android**	[N/A]	Shows the current version of the Android™ operating system on the display.	[N/A]
• **MX system version**	[N/A]	Shows the current version of the display's scalar firmware.	[N/A]
• **Touch kit**	[N/A]	Shows the current version of the touch system firmware.	[N/A]
• **HDMI-out**	[N/A]	Shows the current version of the HDMI-out system firmware.	[N/A]
• **MAC address**	[N/A]	Shows the network's MAC address.	[N/A]
• **Serial number**	[N/A]	Shows the display's serial number.	[N/A]
• **License**	[N/A]	Shows third-party component licenses.	[N/A]
• **User agreement**	[N/A]	Shows the SMART EULA.	[N/A]

Exiting the display's settings

Tap **Exit**.

OR

Press the **Menu** button ☰ on the front control panel.

Appendix D **Managing SMART Board MX (V2), MX Pro (V2), and later series models using RS-232**

Configuring the serial interface settings 108
Commands and responses 109
Power state commands 111
Input commands 113
Brightness commands 113
Freeze commands 113
Screen shade commands 114
Volume commands 114
Mute commands 114
Firmware version commands 114
Model number commands 115
Serial number commands 115
Part number commands 115
Asynchronous messages 115

V4 V4 Pro V3 V3 Pro V2-C V2-C Pro V2 V2 Pro

You can connect an RS-232 cable from a computer or a control system's serial output to the display's RS-232 in connector to remotely select video inputs, turn the display on or off, and get information about the display's current settings, such as volume and power state.

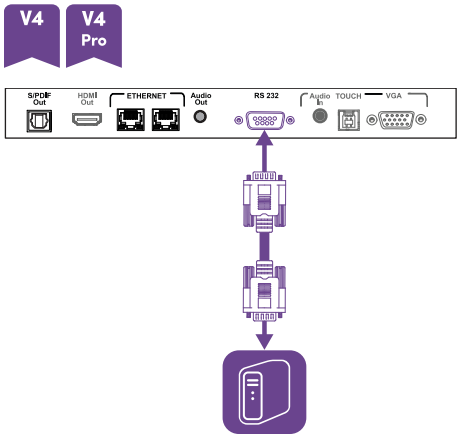

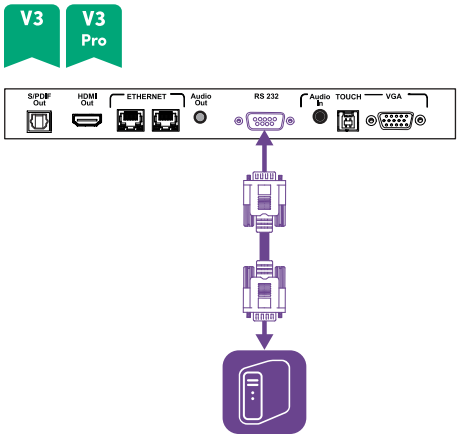

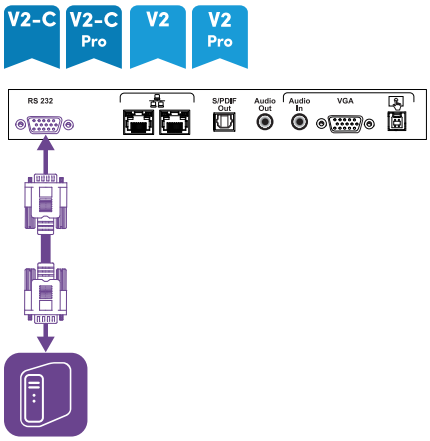

Important

Use only a standard RS-232 cable. Do not use a null modem cable. Null modem cables typically have ends of the same type.

Tip

SMART also offers SMART Remote Management cloud-based device-management software, which you can use to manage SMART Board interactive displays with iQ and devices running Windows, Chrome™ OS, Android, and iOS operating systems. For more information, see SMART Remote Management.

Configuring the serial interface settings

Configure the computer or control system's serial interface before sending commands to the display.

1. Turn on the display.
2. If you're using a terminal application on a computer, activate local echo to see what you're typing and sending to the display.
3. Configure the serial interface settings with the following values:

Baud rate	19200
Data length	8
Parity bit	None
Stop bit	1

4. Send a carriage return character (<CR>) to the display. The display will show a command prompt (>) to indicate that the display can now accept commands.

> **Note**
>
> - If you're using a terminal application on a computer, pressing ENTER should send a carriage return character (<CR>) but may also send a line feed character (<LF>), depending on your terminal application configuration.
> - If no message appears or an error message appears, the serial interface isn't configured correctly. Repeat steps 3 and 4.

When using a control system program instead of terminal program, all lines output from the display are preceded by a carriage return character (<CR>) and line feed character (<LF>) and then followed by a carriage return character (<CR>) and line feed character (<LF>), as shown in the example below. Refer to an ASCII table for more information about character codes if needed.

```
>set volume=0<CR>
<CR><LF>
volume=0<CR><LF>
>
```

Commands and responses

To access display information or to adjust display settings using the room control system, send a command after the command prompt (>), send a carriage return character or press ENTER, and then wait for the response from the display. Responses are preceded by a carriage return character (<CR>) and line feed character (<LF>) and then followed by a carriage return character (<CR>) and line feed character (<LF>). If no command prompt is present, send a carriage return character to the display. If the display is ready to receive commands, it will show a command prompt (>) when the carriage return is received. See the example below.

Correct

```
>get volume

volume=55

>
```

In the example below, the user used `=-50` instead of `-50`.

Incorrect

```
>set volume=-50

invalid cmd: setvolume=-50

>
```

Notes

- Use ASCII formatted commands.
- Commands aren't case-sensitive and extra spacing is ignored.
- In many terminal applications on a computer, you can use the BACKSPACE key when typing commands.
- Review each entry carefully before sending a command to the display.
- Don't send another command until you receive the response and the next command prompt (>). If no command prompt is present, send a carriage return character (<CR>) to the display. If the display is ready to receive commands, it will show a command prompt after receiving the carriage return.

To retrieve a setting's current value

Use a `get` command.

This example shows how to get the volume:

```
>get volume

volume=55

>
```

To assign a value to a setting

Use a `set` command.

This example sets the volume to 65:

```
>set volume=65

volume=65

>
```

To increase or decrease the value of a setting

Use the `set` command to increase or decrease the value by a designated number.

This example increases the volume by 5:

```
>set volume+5

volume=70

>
```

This example decreases the volume by 15:

```
>set volume-15

volume=55

>
```

Power state commands

Get command	Set command	Response
`get powerstate`	`set powerstate[Value]` Where `[Value]` is one of the following: • `=on` • `=ready` • `=standby` • `=powersave` **Notes** • If the display is in UPDATEON or UPDATEREADY state, it might not change power states after receiving the command. • When switching between power states on displays running iQ 3.11 or earlier, wait at least 30 seconds before sending another command.	`powerstate=[Value]` Where `[Value]` is one of the following: • `on` • `ready` • `standby` • `powersave` • `updateon` • `updateready`

The display has six power states:

Power state	Description
ON	The display is in normal operating mode.
READY	The screen is off, but the display is ready to turn on when one of the following occurs: • A user presses the **Power** button ⏻ on the convenience panel or the remote control. • You send the `set powerstate=on` command. • The display receives a video signal.

Power state	Description
STANDBY	The screen is off, and the display is in a low power state. The display enters READY or ON state when one of the following occurs: • A user presses the **Power** button ⏻ on the front control panel or the remote control. • You send the `set powerstate=standby` command. This power state is the default energy saving mode for displays set to a non-EU location. **Note** The EU uses "networked standby" to describe this power state.
POWERSAVE	The screen is off, and the display is a very low power state. The display enters READY or ON state when one of the following occurs: • A user presses the **Power** button ⏻ on the front control panel or the remote control. • You send the `set powerstate=ready` or `set powerstate=on` command. This power state is the default energy saving mode for displays set to an EU location. **Note** The EU uses "standby" to describe this power state.
UPDATEON	The display is updating firmware. Do not turn off the display.
UPDATEREADY	The display is updating firmware while the screen is off. Do not turn off the display.

With the exception of `get powerstate` and `set powerstate`, commands are available only when the display is in READY or ON power state.

Input commands

Get command	Set command	Response
`get input`	`set input[Value]` Where `[Value]` is one of the following: • `=hdmi1` • `=hdmi2` • `=hdmi3` • `=vga1` • `=ops1` • `=usbc1` • `=usbc2` • `=android` **Note** The usbc1 set command applies only to displays equipped with USB Type-C receptacles.	`input=[Value]` Where `[Value]` is one of the following: • `hdmi1` • `hdmi2` • `hdmi3` • `vga1` • `ops1` • `usbc1` • `usbc2` • `android`

Brightness commands

Get command	Set command	Response
`get brightness`	`set brightness[Value]` Where `[Value]` is one of the following: • `+[Value]` • `-[Value]` • `=[5-100]`	`brightness=[Value]` Where `[Value]` is a number between 5 and 100

Freeze commands

Get command	Set command	Response
`get videofreeze`	`set videofreeze[Value]` Where `[Value]` is one of the following: • `=on` • `=off`	`videofreeze=[Value]` Where `[Value]` is one of the following: • `on` • `off`

Screen shade commands

Get command	Set command	Response
`get screenshade`	`set screenshade[Value]` Where `[Value]` is one of the following: • `=on` • `=off`	`screenshade=[Value]` Where `[Value]` is one of the following: • `on` • `off`

Volume commands

Get command	Set command	Response
`get volume`	`set volume[Value]` Where `[Value]` is one of the following: • `+[Value]` • `-[Value]` • `=[0-100]`	`volume=[Value]` Where `[Value]` is a number between 0 and 100

Mute commands

Get command	Set command	Response
`get mute`	set mute`[Value]` Where `[Value]` is one of the following: • `=on` • `=off`	mute=`[Value]` Where `[Value]` is one of the following: • `on` • `off`

Firmware version commands

Get command	Response
`get fwversion`	`fwversion=[Value]` Where `[Value]` is the firmware version.

Model number commands

Get command	Response
`get modelnum`	`modelnum=[Value]` Where `[Value]` is one of the following: • `sbid-mx055-v4` • `sbid-mx065-v4` • `sbid-mx075-v4` • `sbid-mx086-v4` • `sbid-mx055-v3` • `sbid-mx065-v3` • `sbid-mx075-v3` • `sbid-mx086-v3` • `sbid-mx055-v2` • `sbid-mx065-v2` • `sbid-mx075-v2` • `sbid-mx086-v2`

Serial number commands

Get command	Response
`get serialnum`	`serialnum=[Value]` Where `[Value]` is the serial number.

Part number commands

Get command	Response
`get partnum`	`partnum=[Value]` Where `[Value]` is the part number, including the revision.

Asynchronous messages

The display sends an asynchronous message when the front control panel, Settings app, or remote control are used to change a display's setting that can be controlled by RS-232. The display will also send an asynchronous message if the display's power state changes. Asynchronous messages are identified by a pound sign (#) before the message and aren't followed by a command prompt (>).

Change	Asyncronous message
Display power state	`#powerstate=[Value]` Where `[Value]` is one of the following: • `on` • `ready` • `standby` • `powersave` • `updateon` • `updateready`
Input selection	`#input=[Value]` Where `[Value]` is one of the following: • `hdmi1` • `hdmi2` • `hdmi3` • `vga1` • `ops1` • `android`
Brightness	`#brightness=[Value]` Where `[Value]` is a number between 5 and 100
Freeze frame	`#videofreeze=[Value]` Where `[Value]` is one of the following: • `on` • `off`
Screen shade	`#screenshade=[Value]` Where `[Value]` is one of the following: • `on` • `off`
Volume increase or decrease	`#volume=[Value]` Where `[Value]` is a number between 0 and 100
Volume mute	`#mute=[Value]` Where `[Value]` is one of the following: • `on` • `off`

Appendix E **Managing SMART Board MX series models using RS-232**

Configuring the serial interface settings 118
Communication structure 118
Power states 121
Commands 122

MX

You can connect a control system or terminal emulation program on your computer to the display's room control input and remotely select video inputs, change power and sleep states, and get information about the display's current settings, such as current input source, contrast, and power state.

Connect an RS-232 cable from the control system or the computer's serial port to the RS-232 connector on the bottom of the display.

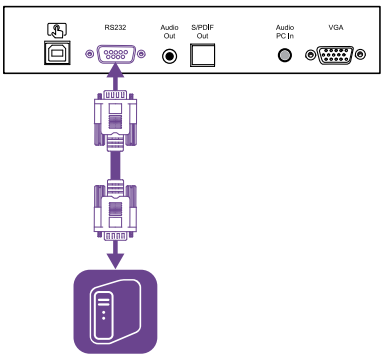

Important

Use only a standard RS-232 cable. Do not use a null modem cable. Null modem cables typically have ends of the same type.

Configuring the serial interface settings

Configure the control system or computer's serial interface before sending commands to the display.

To configure the serial interface settings

1. Turn on the display.
2. Turn on the control system or computer, and access the serial data communications settings.
3. If you're using a terminal emulation program on a computer, activate local echo.
4. Configure the serial interface settings using the following values, and then press ENTER.

Baud rate	19200
Data length	8
Parity bit	None
Stop bit	1

When a command prompt (>) is received by your control system or terminal emulation program, the display can accept commands. If the command prompt isn't received, send a carriage return character (0x0d) to the display (press ENTER on your keyboard if you're using a terminal emulation program on your computer).

> **Note**
>
> If no message or an error message is received in the control system or terminal emulation program, the serial interface isn't configured correctly. Repeat steps 3 and 4.

Communication structure

Communication consists of a command argument, the property affected, an operator symbol, a value to apply, and a terminating carriage return character (0x0d).

> **Important**
>
> When manually entering commands into a terminal emulation program, commands must be terminated with only a carriage return character (0x0d). If you terminate a command with both a carriage return character (0x0d) and a line feed (0x0a), the command may not be processed, and the command prompt that indicates readiness to receive the next command may not be received.

Notes

- The display won't respond to RS-232 commands when it is in a low power state (soft off). Disable Power saving mode to prevent the display from entering a low power state. See *Power saving mode* on page 103.
- When you first turn on the display, the RS-232 connector operates in a special diagnostics mode instead of control mode, and the display won't respond to control commands. In addition, the connected control system or terminal emulation program might receive unexpected data characters.

  Program a connected control system to ignore the unexpected data characters and only send commands after it receives the command prompt (>).

  If you haven't disabled Power saving mode, you'll see the unexpected characters every time you turn on the display.

Correct

```
>set input=HDMI1
```

Incorrect

```
>set HDMI1
```

To use the room control system to get information about the display or to adjust display settings, send commands after receiving a command prompt (>), and then wait for the display's response before sending another command.

Correct

```
>get volume
volume=55
>
```

If you send a command that the room control system doesn't recognize, you receive an invalid command response.

The example contains an extra space in the volume command.

Incorrect

```
>set vol ume=65
invalid cmd=set vol ume=65
>
```

Notes

- Use ASCII formatted commands.
- Commands aren't case-sensitive.
- When manually entering commands into a terminal emulation program, review each entry carefully before you press ENTER to send a carriage return (0x0d) to terminate the command.
- Don't send another command until you receive the response and the next command prompt.

To identify the current value of a setting

Use a `get` command.

This example shows how to get the display's current volume setting:

```
>get volume
volume=55
>
```

To assign a value to a setting

Use a `set` command.

This example sets the volume to 65:

```
>set volume=65
volume=65
>
```

To increase or decrease the value of a setting

Use the `set` command to increase or decrease the value by a designated number.

This example increases the volume by 5:

```
>set volume+5
volume=70
>
```

This example decreases the volume by 15:

```
>set volume-15
volume=55
>
```

Power states

The display has the following power states:

Power state	Description
ON	The display is in normal operating mode.
READY	The screen is off, but the display is ready to turn on when: • A user presses the **Power** button ⏻ on the front control panel. • A user presses the **Power** button on the remote control. • You send the `set powerstate=on` command. **Tip** If the `set powerstate` command returns an "invalid command" message, add spaces around the operator symbol (=).
SOFT OFF (low power state)	The screen is in a low power state (soft off) and won't respond to RS-232 commands. Disable Power saving mode to prevent the display from entering a low power state. See *Power saving mode* on page 103. The display turns on when: • A user presses the **Power** button ⏻ on the front control panel. • A user presses the **Power** button on the remote control.
UPDATEON	The display is updating firmware. Do not turn off the display.
UPDATEREADY	The display is updating firmware while the screen is off. Do not turn off the display.

With the exception of `get powerstate` and `set powerstate`, commands are available only when the display is in ON power state.

Commands

Get command	Set command	Response
`get powerstate`	`set powerstate[Value]` Where `[Value]` is one of the following: • `= on` • `= ready` **Notes** • If the command returns an "invalid command" message, add spaces around the operator symbol (=). • When the screen is in a low power state, it doesn't respond to any RS-232 commands. Disable Power saving mode to prevent the display from entering a low power state. See *Power saving mode* on page 103. • If the display is in UPDATEON or UPDATEREADY state, it might not change power states after it receives the command.	`powerstate=[Value]` Where `[Value]` is one of the following: • `on` • `ready` • `updateon` • `updateready`
`get input`	`set input[Value]` Where `[Value]` is one of the following: • `=OPS` • `=OPSCC` • `=HDMI1` • `=HDMI2` • `=HDMI3` • `=VGA`	`input=[Value]` Where `[Value]` is one of the following: • `=OPS` • `=OPSCC` • `=HDMI1` • `=HDMI2` • `=HDMI3` • `=VGA` • `=ANDROID` **Notes** • `=OPSCC` is only available if you install an AM50 iQ appliance and compute card. • `=ANDROID` is the display's settings.

Get command	Set command	Response
`get brightness`	`set brightness[Value]` Where `[Value]` is one of the following: • `+[Value]` • `-[Value]` • `=[5-100]`	`brightness=[Value]` Where `[Value]` is a number between 5 and 100 **Note** Enabling Auto Brightness overrides any brightness values set manually.
`get volume`	`set volume[Value]` Where `[Value]` is one of the following: • `+[Value]` • `-[Value]` • `=[0-100]`	`volume=[Value]` Where `[Value]` is a number between 0 and 100
`get mute`	`set mute[Value]` Where `[Value]` is one of the following: • `=on` • `=off`	`mute=[Value]` Where `[Value]` is one of the following: • `on` • `off`
`get fwversion`	N/A	`fwversion=[Value]` Where `[Value]` is the firmware version.
`get serialnum`	N/A	`serialnum=[Value]` Where `[Value]` is the display's serial number. **Note** If multiple displays are connected, the response includes the serial numbers for all displays, separated by commas.
`get partnum`	N/A	`partnum=[Value]` Where `[Value]` is the part number, including the revision.
`get videofreeze` **Note** This command is only available in SMART Board MX firmware 1.8.7 or later.	`set videofreeze=[Value]` Where `[Value]` is one of the following: • `=on` • `=off` **Note** This command is only available in SMART Board MX firmware 1.8.7 or later.	`videofreeze=[Value]` Where `[Value]` is one of the following: • `on` • `off` **Note** This command is only available in SMART Board MX firmware 1.8.7 or later.

Appendix F **Enrolling the display in SMART Remote Management**

Your SMART Board MX or MX Pro series interactive display has a built-in feature that enables you to enroll the display with your organization's SMART Remote Management account. When you enroll the display, you can use SMART Remote Management to centrally control the display's features and settings, such as:

- blocklists and allowlists
- Wi-Fi
- wallpaper
- certificates
- lock screen
- available apps

See › support.smarttech.com/docs/enrolllingsrm

Certification and compliance

Electronic (e-label) information

Regulatory information is available in the display's settings. From the Home screen, tap **Settings > About > Regulatory Information**.

Informations électroniques (e-Label)

Les informations réglementaires sont disponibles dans les paramètres de l'écran. Depuis l'écran d'accueil, appuyez sur **Paramètres > À propos de > Informations réglementaires**.

Federal Communication Commission interference statement

FCC
Suppliers Declaration of Conformity
47 CFR § 2.1077 Compliance Information
Unique Identifier: IDX55-2, IDX55-3, IDX55-4, IDX65-1, IDX65-2, IDX65-3, IDX65-4, IDX75-1, IDX75-2, IDX75-3, IDX75-4, IDX86-1, IDX86-2, IDX86-3, IDX86-4
Responsible Party – U.S. Contact Information
SMART Technologies Inc.
2401 4th Ave., 3rd Floor
Seattle, WA 98121
compliance@smarttech.com

This device complies with Part 15 of the FCC Rules. Operation is subject to the following two conditions:

1. This device may not cause harmful interference, and
2. this device must accept any interference received, including interference that may cause undesired operation.

Note

This equipment has been tested and found to comply with the limits for a Class A digital device, pursuant to part 15 of the FCC Rules. These limits are designed to provide reasonable protection against harmful interference when the equipment is operated in a commercial environment. This equipment generates, uses, and can radiate radio frequency energy and, if not installed and used in accordance with the instruction manual, may cause harmful interference to radio communications. Operation of this equipment in a residential area is likely to cause harmful interference in which case the user will be required to correct the interference at his own expense.

Caution

Any changes or modifications not expressly approved by the party responsible for compliance could void the user's authority to operate this equipment.

Restriction

Operations in the 5.15-5.25GHz band are restricted to indoor usage only.

IEEE 802.11b or 802.11g operation of this product in the USA is firmware limited to channels 1 through 11.

Caution

i. the device for operation in the band 5150-5250 MHz is only for indoor use to reduce the potential for harmful interference to co-channel mobile satellite systems;
ii. the maximum antenna gain permitted for devices in the bands 5250-5350 MHz and 5470-5725 MHz shall comply with the e.i.r.p. limit; and
iii. the maximum antenna gain permitted for devices in the band 5725-5825 MHz shall comply with the e.i.r.p. limits specified for point-to-point and non point-to-point operation as appropriate.
iv. Users should also be advised that high-power radars are allocated as primary users (i.e., priority users) of the bands 5250-5350 MHz and 5650-5850 MHz and that these radars could cause interference and/or damage to LE-LAN devices.

Radiation exposure statement

This equipment complies with FCC radiation exposure limits set forth for an uncontrolled environment. This equipment should be installed and operated with minimum distance of 20 cm between the antenna of this device and all nearby persons. This transmitter must not be co-located or operated in conjunction with any other antenna or transmitter.

Innovation, Science and Economic Development Canada statement

This device complies with RSS-247 of the Innovation, Science and Economic Development Canada Rules. Operation is subject to the following two conditions:

1. This device may not cause harmful interference, and
2. this device must accept any interference received, including interference that may cause undesired operation.

Radiation exposure statement

This equipment complies with ISED radiation exposure limits set forth for an uncontrolled environment. This equipment should be installed and operated with minimum distance of 20 cm between the antenna of this device and all nearby persons. This transmitter must not be co-located or operated in conjunction with any other antenna or transmitter.

Innovation, Science et Développement économique Déclaration du Canada

Cet appareil est conforme à la norme ISED CNR-247 pour les appareils radio agréés. Son fonctionnement est soumis aux deux conditions suivantes:

1. le dispositif ne doit pas produire de brouillage préjudiciable, et
2. ce dispositif doit accepter tout brouillage reçu, y compris un brouillage susceptible de provoquer un fonctionnement indésirable.

Advertissement

i. les dispositifs fonctionnant dans la bande 5 150-5 250 MHz sont réservés uniquement pour une utilisation à l'intérieur afin de réduire les risques de brouillage préjudiciable aux systèmes de satellites mobiles utilisant les mêmes canaux;
ii. le gain maximal d'antenne permis pour les dispositifs utilisant les bandes 5 250-5 350 MHz et 5 470-5 725 MHz doit se conformer à la limite de p.i.r.e.;
iii. le gain maximal d'antenne permis (pour les dispositifs utilisant la bande 5 725-5 825 MHz) doit se conformer à la limite de p.i.r.e. spécifiée pour l'exploitation point à point et non point à point, selon le cas.
iv. De plus, les utilisateurs devraient aussi être avisés que les utilisateurs de radars de haute puissance sont désignés utilisateurs principaux (c.-à-d., qu'ils ont la priorité) pour les bandes 5 250-5 350 MHz et 5 650-5 850 MHz et que ces radars pourraient causer du brouillage et/ou des dommages aux dispositifs LAN-EL.

Déclaration d'exposition aux radiations

Cet équipement est conforme aux limites d'exposition aux rayonnements ISED établies pour un environnement non contrôlé. Cet équipement doit être installé et utilisé avec un minimum de 20 cm de distance entre la source de rayonnement et votre corps. Cet émetteur ne doit pas être co-implantés ou exploités conjointement avec une autre antenne ou émetteur.

EU declaration of conformity

Hereby SMART Technologies ULC declares that the radio equipment type Interactive displays model IDX55-2, IDX55-3, IDX55-4, IDX65-1, IDX65-2, IDX65-3, IDX65-4, IDX75-1, IDX75-2, IDX75-3, IDX75-4, IDX86-1, IDX86-2, IDX86-3, IDX86-4, and the OPS AM40, AM50, PCM8, PCM11 are in compliance with Directive 2014/53/EU.

Warning

Operation of this equipment in a residential environment this equipment may could cause radio interference.

The full text of the EU declaration of conformity is available at the following internet address: smarttech.com/compliance

The frequency band and the maximum transmitted power in EU are listed below:

Transmitting Band (MHz)	Maximum Transmit Power
IDX55-2, IDX55-3, IDX65-1, IDX65-2, IDX65-3, IDX75-1, IDX75-2, IDX75-3, IDX86-1, IDX86-2, IDX86-3	
2402-2483.5	19dBm (EIRP)
5150-5350	23dBm (EIRP)
5470-5350	23dBm (EIRP)
IDX55-4, IDX65-4, IDX65-4, IDX86-4	
13.56	0.0007µW (ERP)
2400-2483.5	20dBm (EIRP)
5150-5350	22dBm (EIRP)
5470-5725	20dBm (EIRP)
5725-5825	14dBm (EIRP)

Restrictions in

AT/BE/BG/CZ/DK/EE/FR/DE/IS/IE/IT/EL/ES/CY/LV/LI/LT/LU/HU/MTNL/NO/PL/PT/RO/SI/SK/TR/FI/SE/CH/UK/HR—5150MHz-5350MHZ is for indoor use only.

Caution: Exposure to Radio Frequency Radiation

This equipment complies with EU radiation exposure limits set forth for an uncontrolled environment. This equipment should be installed and operated with minimum distance 20 cm between the radiator and your body.

Japan VCCI Class A statement – applicable only to models certified for sale in Japan

この装置は、クラスA情報技術装置です。この装置を家庭 環境で使用すると電波妨害を引き起こすことがあります。この場 合には使用者が適切な対策を講ずるよう要求されることがあります。VCCI-A

日本国内は100V交流動作のみに制限されています。

当該機器には電波法に基づく、技術基準適合証明等を受けた特定無線設備を装着している。

電波法により5.2/5.3 GHz帯は屋内使用に限タります。

This is a Class A product based on the standard of the Voluntary Control Council for Interference (VCCI). If this equipment is used in a domestic environment, radio interference may occur, in which case the user may be required to take corrective actions.

Operation in Japan is restricted to 100V AC operation only.

This equipment contains specified radio equipment that has been certified to the Technical Regulation Conformity Certification under the Radio Law.

The 5.2/5.3 GHz band is restricted to indoor use due to the Radio Law.

Hardware environmental compliance

SMART Technologies supports global efforts to ensure that electronic equipment is manufactured, sold, and disposed of in a safe and environmentally friendly manner.

Waste Electrical and Electronic Equipment and Battery regulations (WEEE and Battery Directives)

Electrical and electronic equipment and batteries contain substances that can be harmful to the environment and to human health. The crossed-out wheeled bin symbol indicates that products should be disposed of in the appropriate recycling stream and not as regular waste. See smarttech.com/compliance for more information.

Batteries

The remote control contains alkaline batteries. Recycle or dispose of batteries properly.

SMART Technologies

smarttech.com/support

smarttech.com/contactsupport

docs.smarttech.com/kb/171555